Arduino and state machines

Technische Universiteit
Eindhoven
University of Technology

Where innovation starts

Content

- Light-Time-Switch
- Light-Time-LDR-Fade

Light-Time-Switch

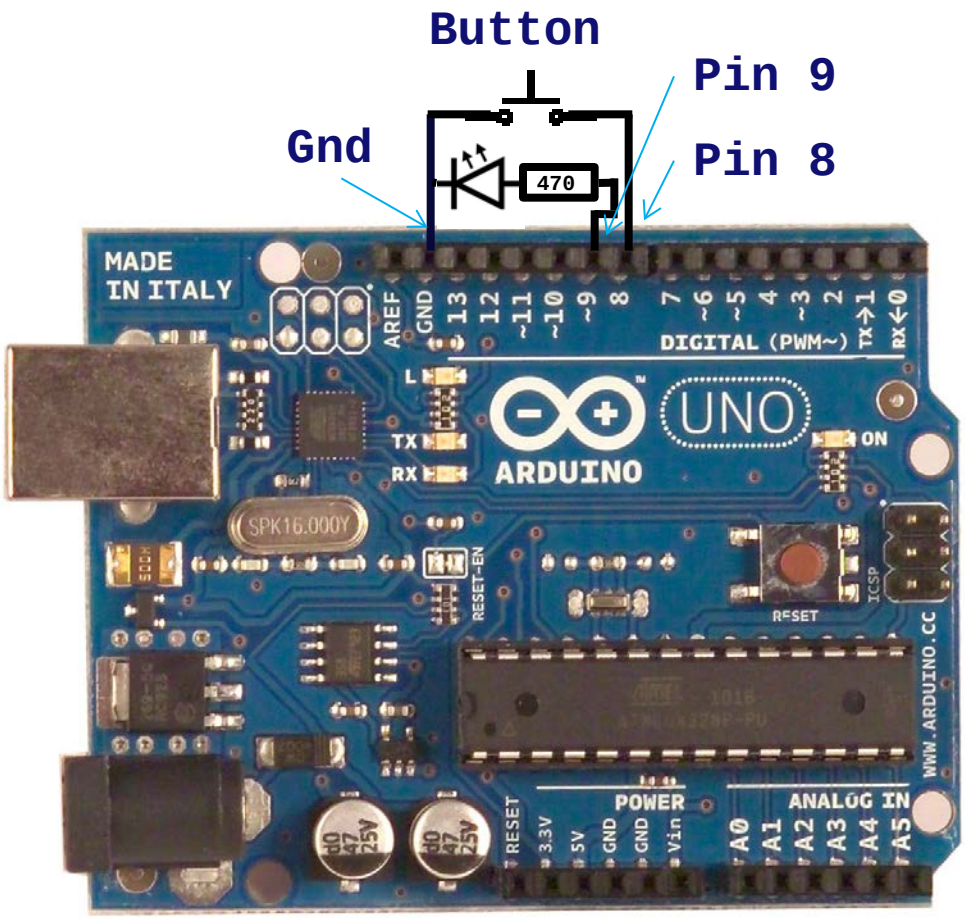

Light-Time-Switch

- Introducing the button in the program:

```
#define buttonPin 8
void setup()  {
     pinMode(buttonPin,INPUT_PULLUP);
     // pinMode(buttonPin,INPUT);  // set input
     // digitalWrite(buttonPin,HIGH); // pull up
}
```

- using it:

```
int button = digitalRead(buttonPin);
```

Light-Time-Switch

- Introducing the LED in the program:

```
#define ledPin 9
void setup()  {
   pinMode(ledPin, OUTPUT);
   //more
}
```

- using it:

```
analogWrite(ledPin,0  );//min brightness
analogWrite(ledPin,255);//max  brightness
```

Light-Time-Switch

Process LED step
(Notation: Finite State Machine)

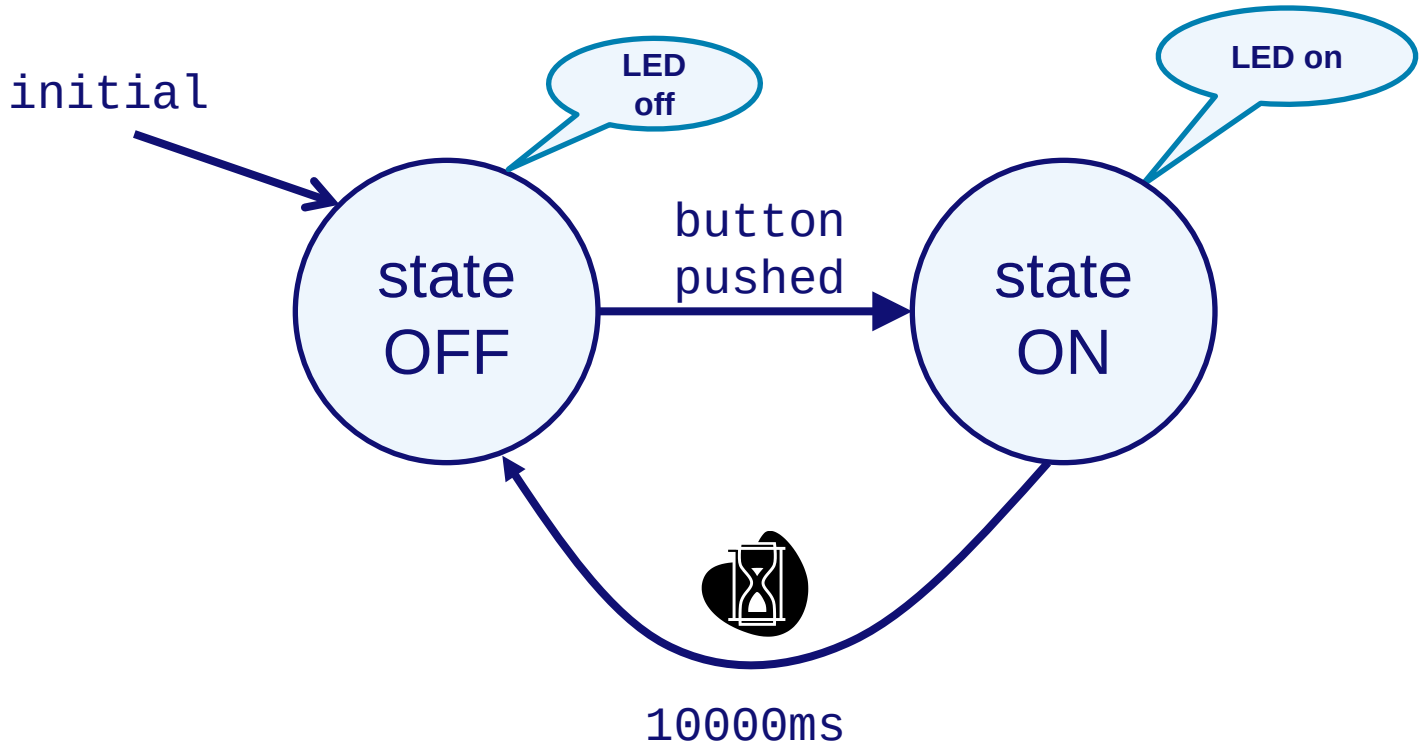

Light-Time-Switch: full code

```
/*
  Author      : Loe Feijs
  Date        : 20130302
  Modified    : P.Peters
  Date        : 20131205

  This example shows how to control a LED using a
  finite state machine. The LED goes on when the button
  switch is pushed. The LED goes off after 10 seconds.
*/

//connect LED, Button:
#define ledPin 9
#define buttonPin 8
```

Light-Time-Switch: full code

```
//FSM states:
#define OFF 0
#define ON  1

int state = OFF; // initial state
int timer = 0;
boolean event = false;

void setup()  {
   pinMode(ledPin, OUTPUT);
   pinMode(buttonPin, INPUT_PULLUP);
}
```

Light-Time-Switch: full code

```
void LEDstep(){
     int button = digitalRead(buttonPin);

     switch (state){
     case OFF:
          if (button == LOW){
               // change state
               state = ON;
               // state transition actions
               timer = 1000; //10 seconds
               analogWrite(ledPin,255);//max brightness
           }
           break;
```

Light-Time-Switch: full code

```
        case ON:
            if (timer <= 0){
                // change state
                state = OFF;
                // state transition actions
                analogWrite(ledPin,0);
            } else timer--;
            break;
        }
}
```

Light-Time-Switch: full code

```
void loop()  {
     LEDstep();
     delay(10); // one step every 10 ms
}
```

Arduino CODE

Light-Time-LDR-Fade

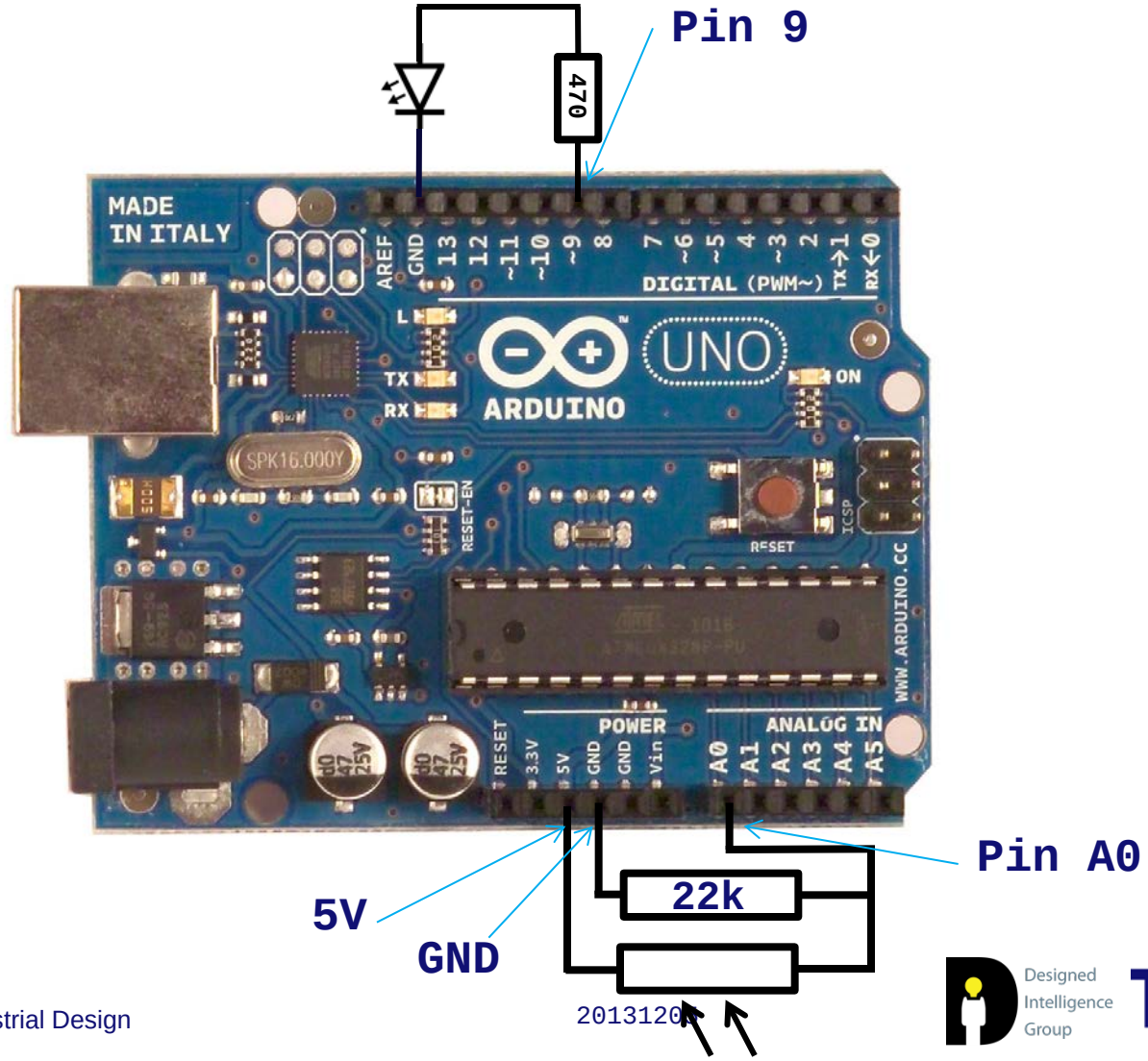

Light-Time-LDR-Fade

- Introducing the LDR in the program:

```
#define ldrPin A0

void setup()  {
   pinMode(ldrPin, INPUT);
   //more
}
```

- using it:

```
float avg;
avg = (float)analogRead(ldrPin);
```

Light-Time-LDR-Fade

Process LED step
(Notation: Finite State Machine)

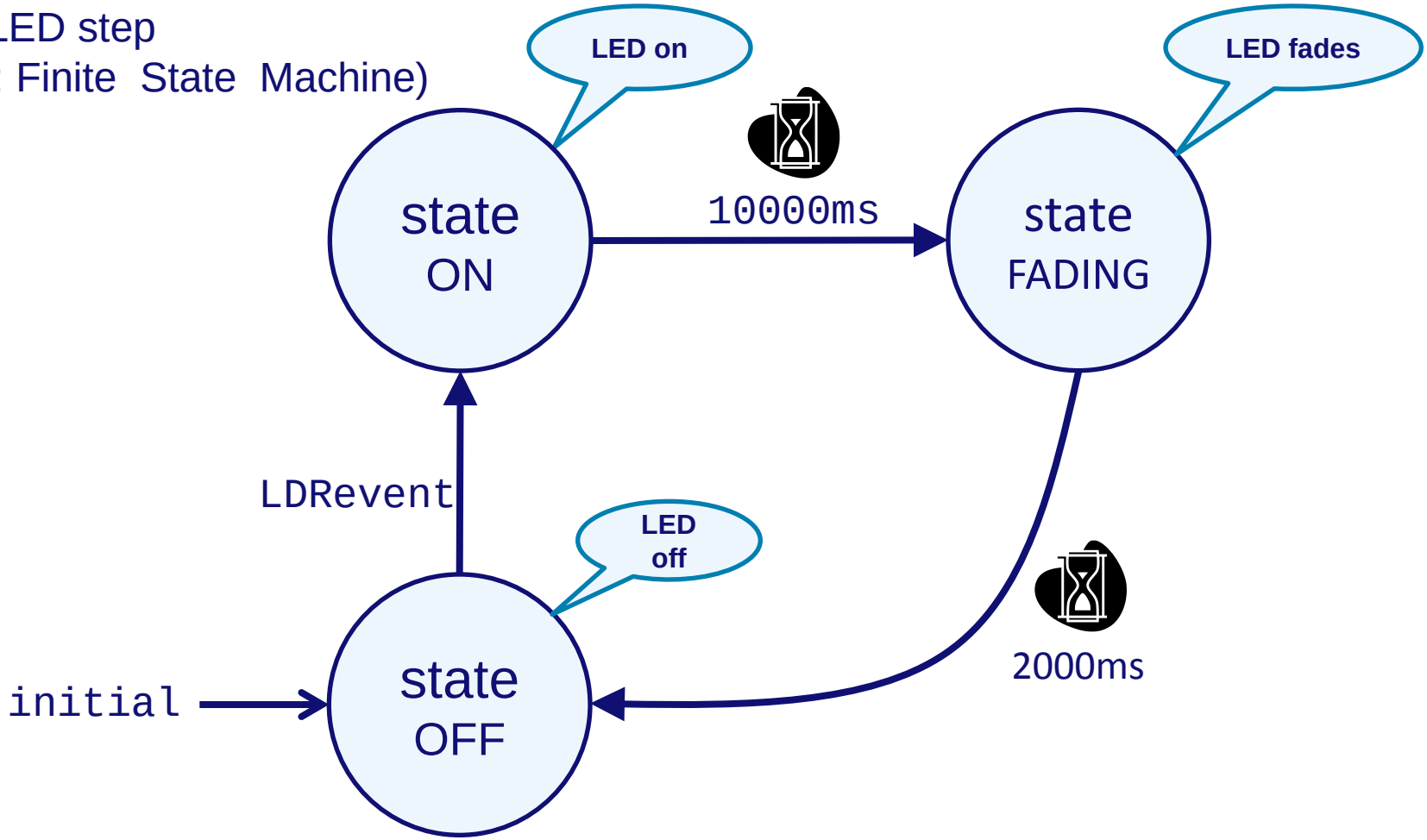

Light-Time-LDR-Fade

Processes LED step, LDR step (Notation: Data Flow Diagram)

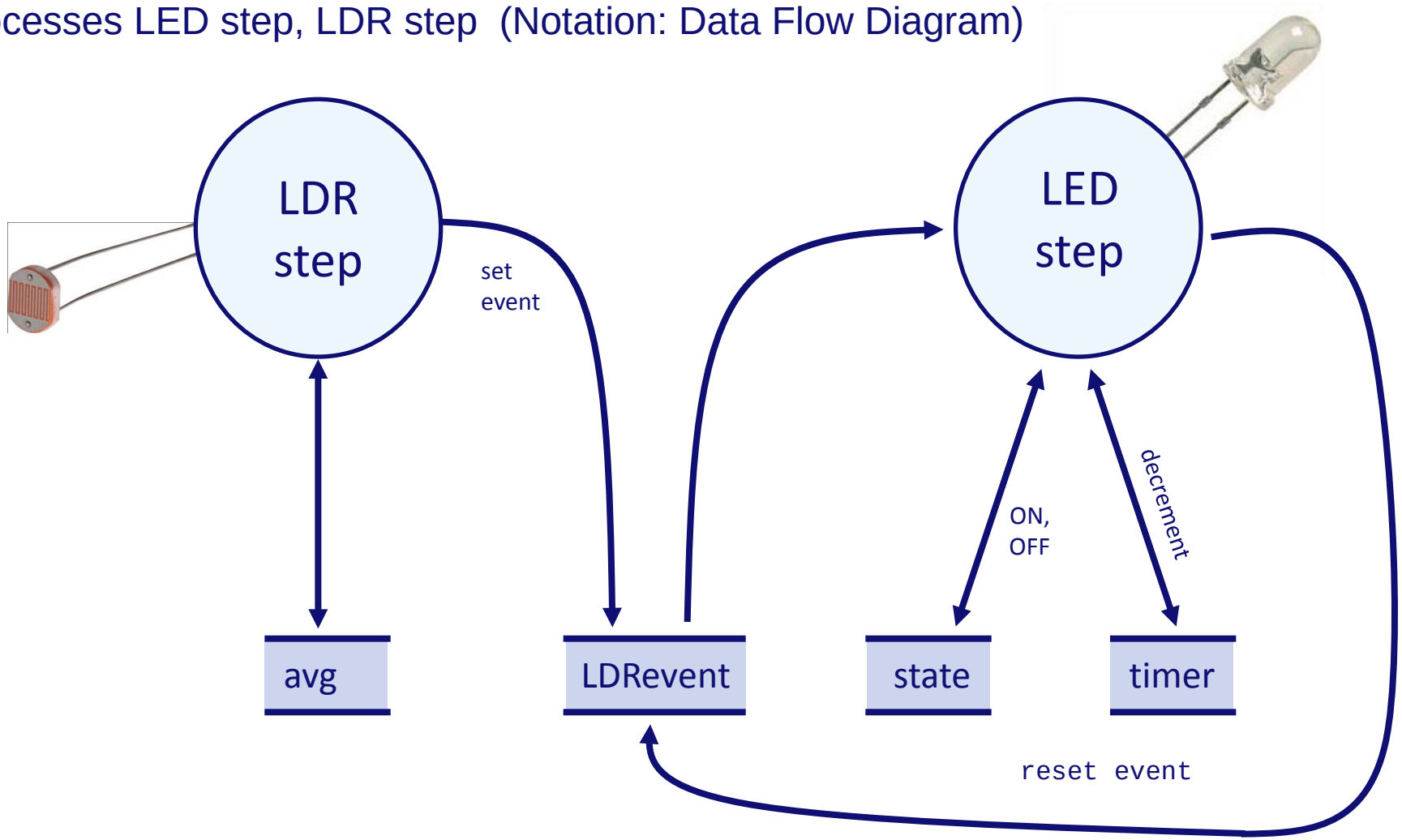

Source LDRimage: http://tutorial.cytron.com.my/2011/08/10/project-9-%E2%80%93-analog-sensor-light-detection-using-ldr/
Source LEDimage: http://www.mindsetsonline.co.uk/index.php?cPath=16_560_48

Light-Time-LDR-Fade: full code

```
/*
  (C) Loe Feijs and TU/e 2013. This example shows how a
  control an LED (LED via 470 Ohm between pin 9 and
  GND). The light goes on when the environment's bright-
  ness changes suddenly. The averaged brightness is cal-
  culated by a moving average with time constant of 20
  seconds. The LDR is connect between +5V and pin A0
  The LDR has a pull-down resistor of 22k between pin
  A0 and GND. The LED fades out after 10 seconds. It
  takes 2 seconds to fade out.
 */

//FSM states:
#define OFF 0
#define ON  1
#define FADING 2
```

Light-Time-LDR-Fade: full code

```
//connect LED, LDR:
#define ledPin 9
#define ldrPin A0

int state = OFF;
int timer = 0;
boolean LDRevent = false;

void LEDstep(){
     switch (state){
```

Light-Time-LDR-Fade: full code

```
case OFF:
     if (LDRevent){
         state = ON;
         timer = 1000; //10000 milliseconds
         analogWrite(ledPin,255); //max brightness
      }
      break;
case ON:
     if (timer <= 0){
         timer = 200;
         state = FADING;
     } else timer--;
     break;
```

Light-Time-LDR-Fade: full code

```
        case FADING:
             if (timer > 0){
                 // state internal actions
                 timer--;
                 analogWrite(ledPin,10*timer/8);
                 //fade from 250 to 0 during 2000ms
              }  else {
                 state = OFF;
                 // state transition actions
                 LDRevent = false;
                 analogWrite(ledPin,0);
              }
              break;
        }
    }
```

Light-Time-LDR-Fade: full code

```
float avg;

void setup()  {
   pinMode(ledPin, OUTPUT);
   pinMode(ldrPin, INPUT);
   avg = (float)analogRead(ldrPin);
}
```

Light-Time-LDR-Fade: full code

```
void LDRstep(){
    //LDR from +5V to pin A0, pulldown 22k to GND
    int v = analogRead(ldrPin);
    avg = 0.9995 * avg + 0.0005* (float)v;
    float delta = 20.0;
    float dif = (float)v - avg;
    if (abs(dif) > delta)
        LDRevent = true;
}
```

exponentially weighted moving average
Time constant 20 seconds

Light-Time-LDR-Fade: full code

```
void loop()  {
     LDRstep();
     LEDstep();
     delay(10); // 10 ms delay between steps
}
```

Arduino Code

Light-Time-LDR-Fade (looking back)

Useful principles:

- More parallel processes
- Fading LED using PWM