The Elements of Mechanical Design

J.G. Skakoon, ASME Press, New York, 2008

Dr. ir. F.L.M. Delbressine, TU/e

October 2, 2012

Contents:

References Title

Elementary rules of mechanical design

1. Create designs that are explicitly simple
2. Keep the functions of a design independent
3. Use exact kinematic constraint design
4. Plan the load paths
5. Triangulate parts and structures to make them stiffer
6. Avoid bending stress
7. Improve designs with self-help
8. Manage friction in mechanisms

Contents

Create designs that are explicitly simple, keep complexity intrinsic

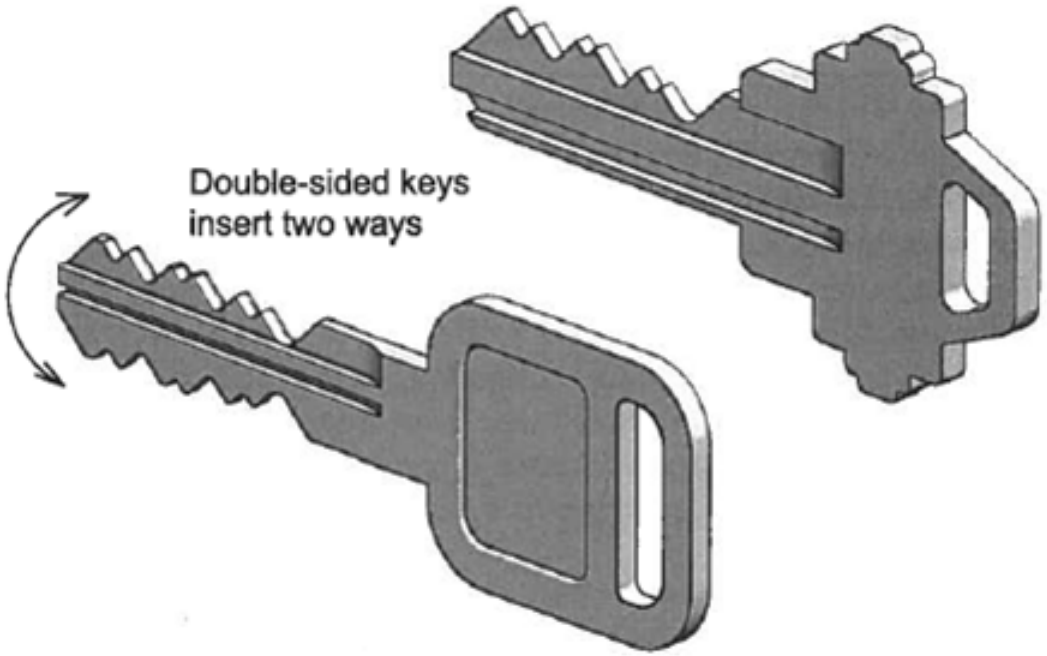

Figure 1-1 Symmetric items are simpler—to use or assemble, even if they are more complicated to produce.

Elementary rules

Keep the functions of a design independent from one another

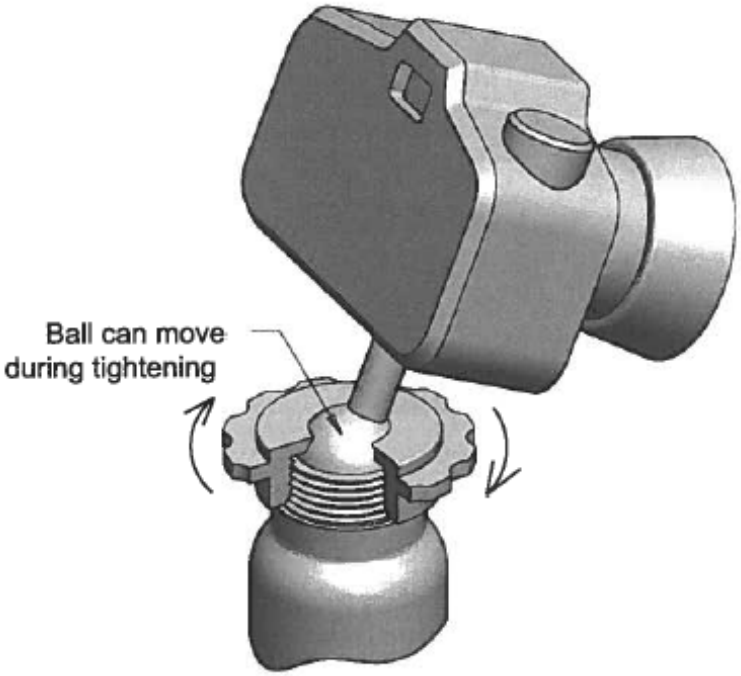

Figure 2-1 Ball-and-socket tripod head for camera. There is no functional independence of positioning and locking.

Locking function independent from locating function

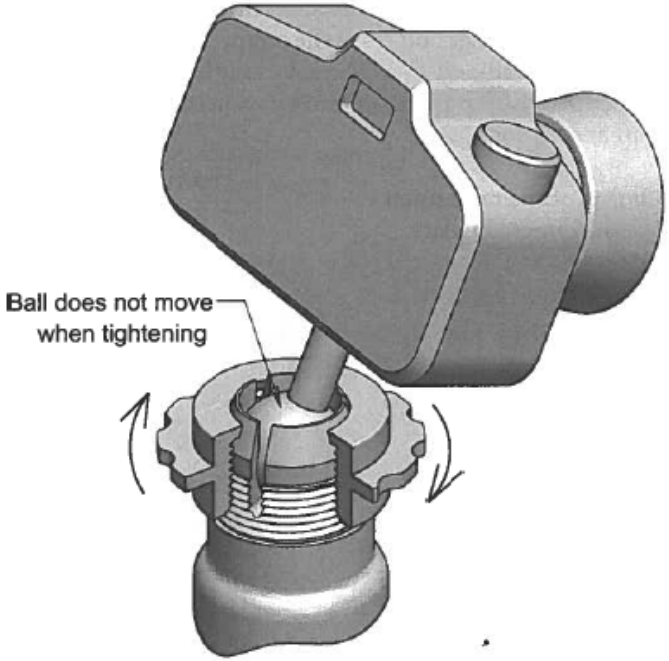

Figure 2-2 Slotted collet for ball-and-socket tripod head. Locking function is independent of locating function.

Indepence of all functions

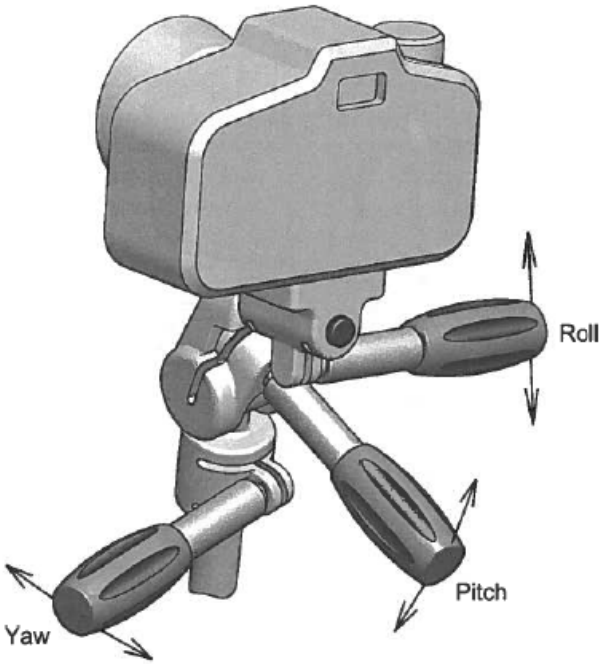

Figure 2-3 Multi-axis pan head camera mount has functional independence of all three rotational locking and positioning functions.

Elementary rules

Take home message:

Use Exact Kinematic Constraint Design to generate Sound Mechanical Designs

Use exact kinematic constraint when designing structures and mechanisms

Advantages exactly constrained compared to over-constrained designs:

1. No binding
2. No play
3. Repeatable position
4. No internal stresses
5. Loose-tolerance parts
6. Easy assembly
7. Robustness to wear and environment

Example: overconstrained design

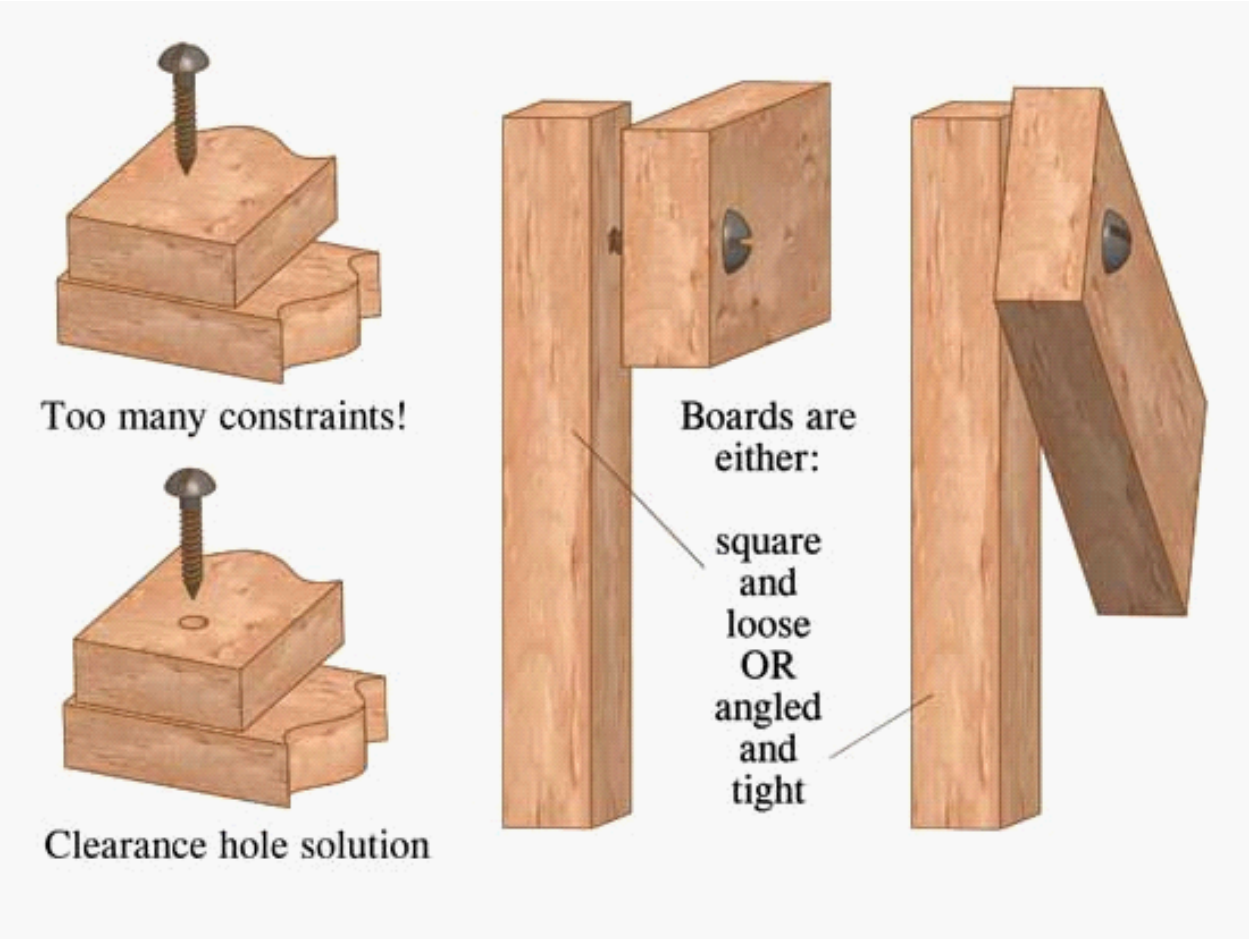

3 degrees of freedom of a rigid body in 2D

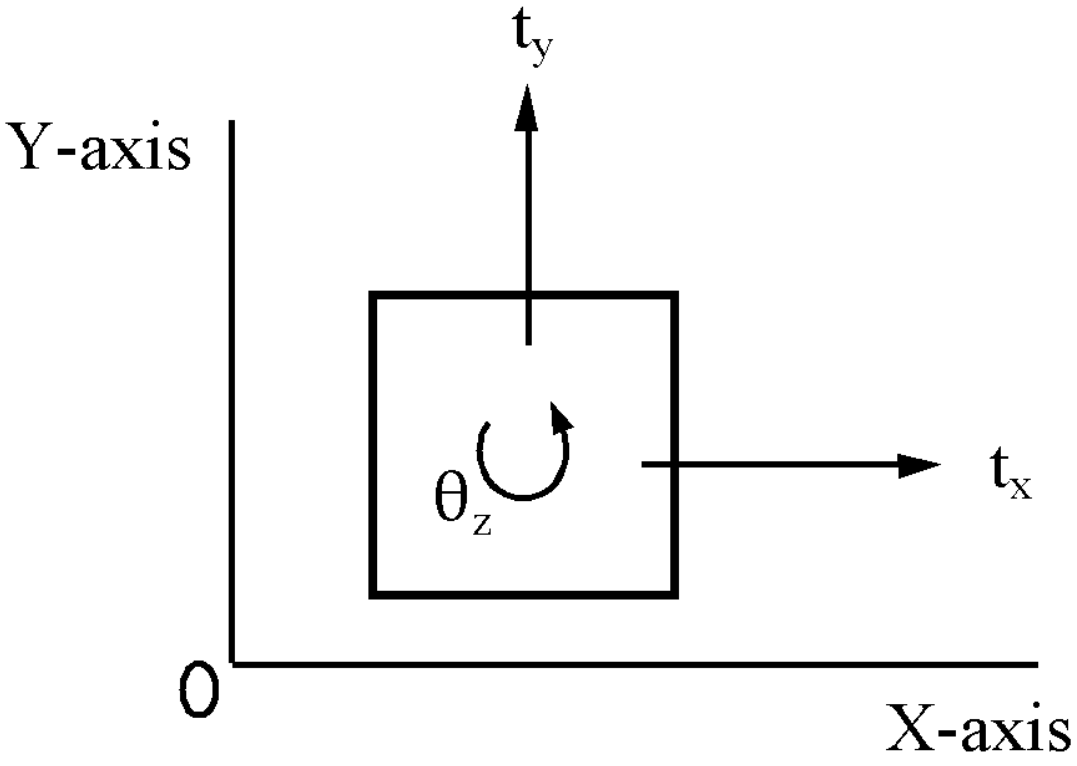

6 degrees of freedom of a rigid body in 3D

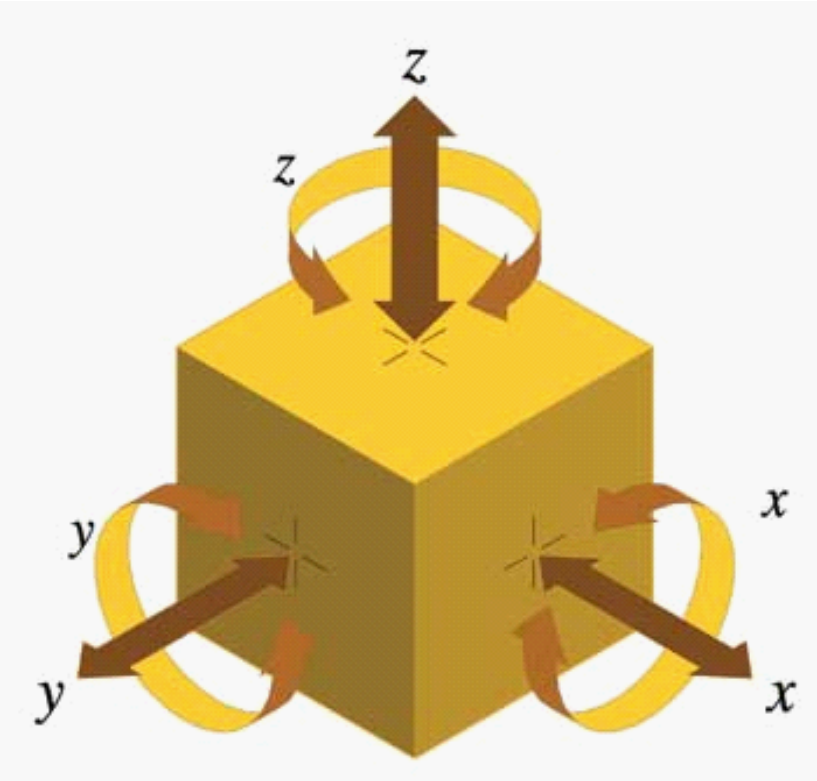

Hands on: 2D exact constraint examples

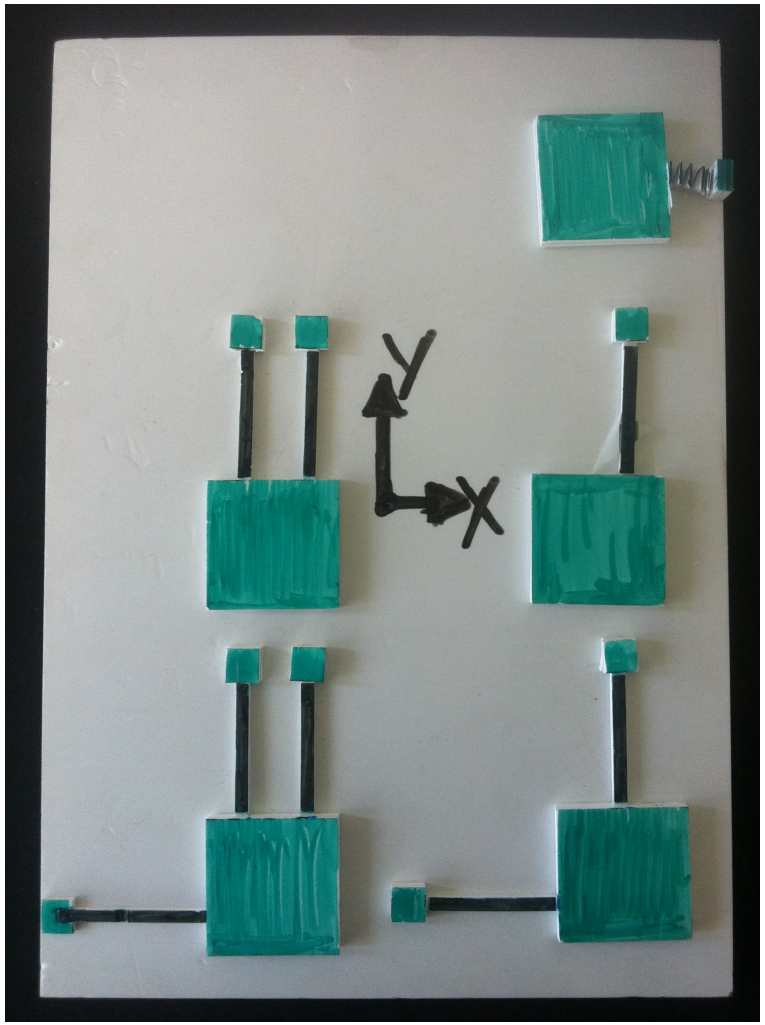

2D Single constraint design example

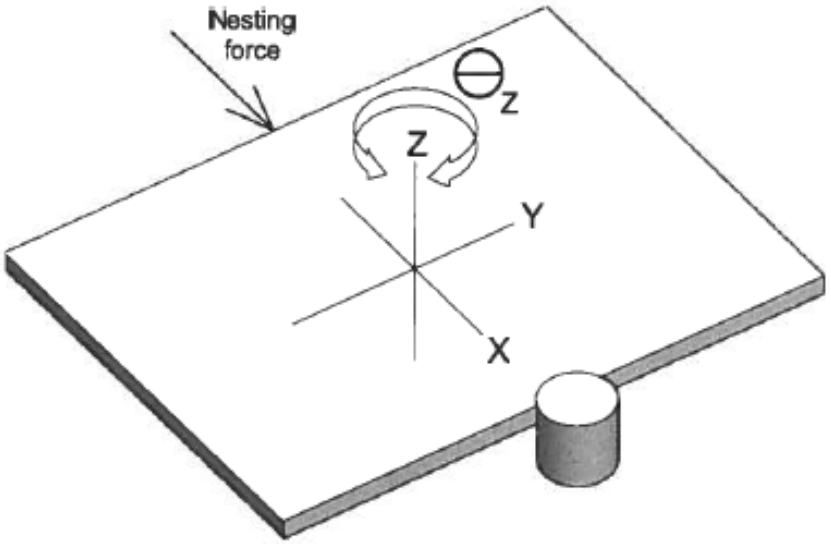

Figure 3-6 Two-dimensional example: a single constraint. A constraint is a point of contact together with a nesting force. The nesting force goes through the contact point in the tangent normal direction.

2D plate 2 constraint example

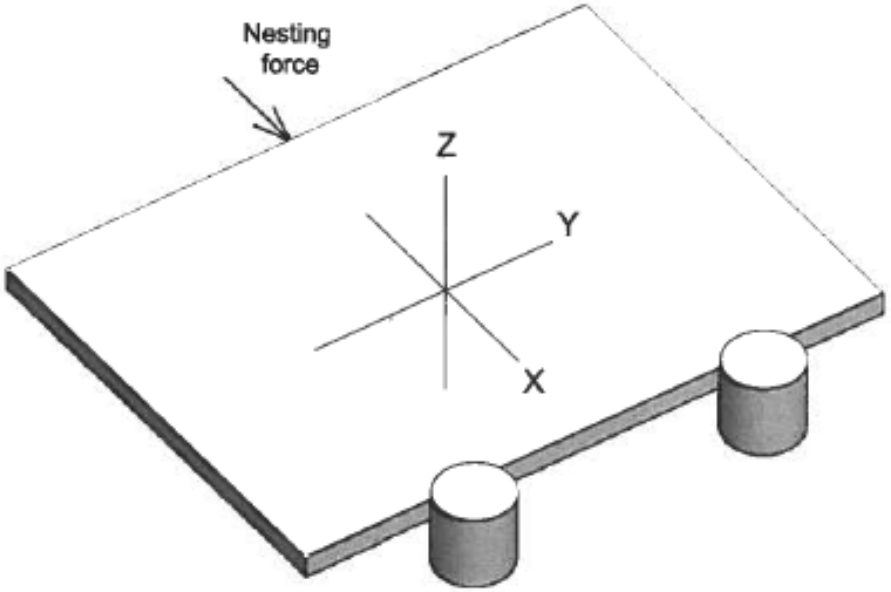

Figure 3-7 Plate constrained against rotation in two dimensions.

2D plate fully constraint example

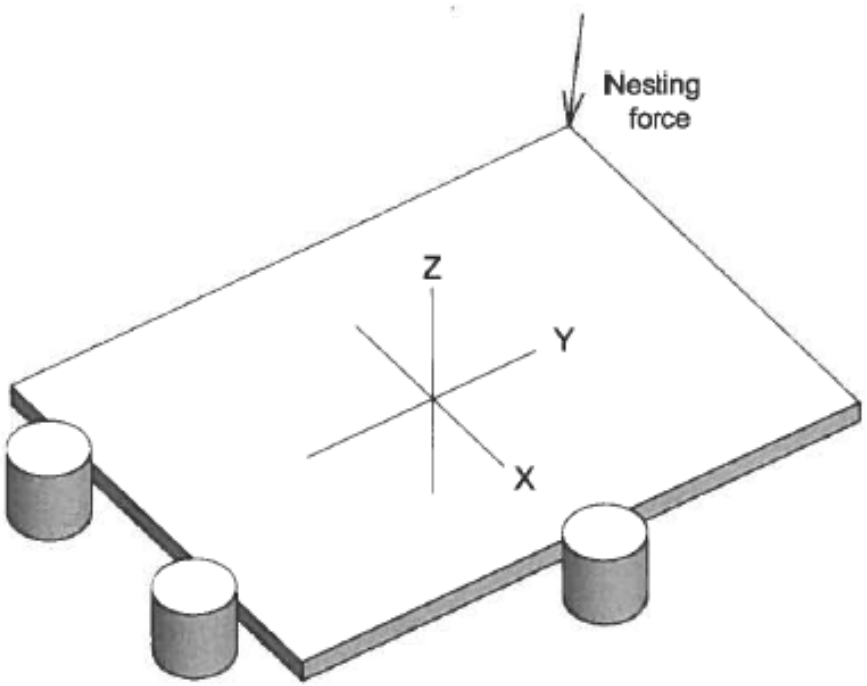

Figure 3-9 Plate fully constrained in two dimensions.

2D constraint examples

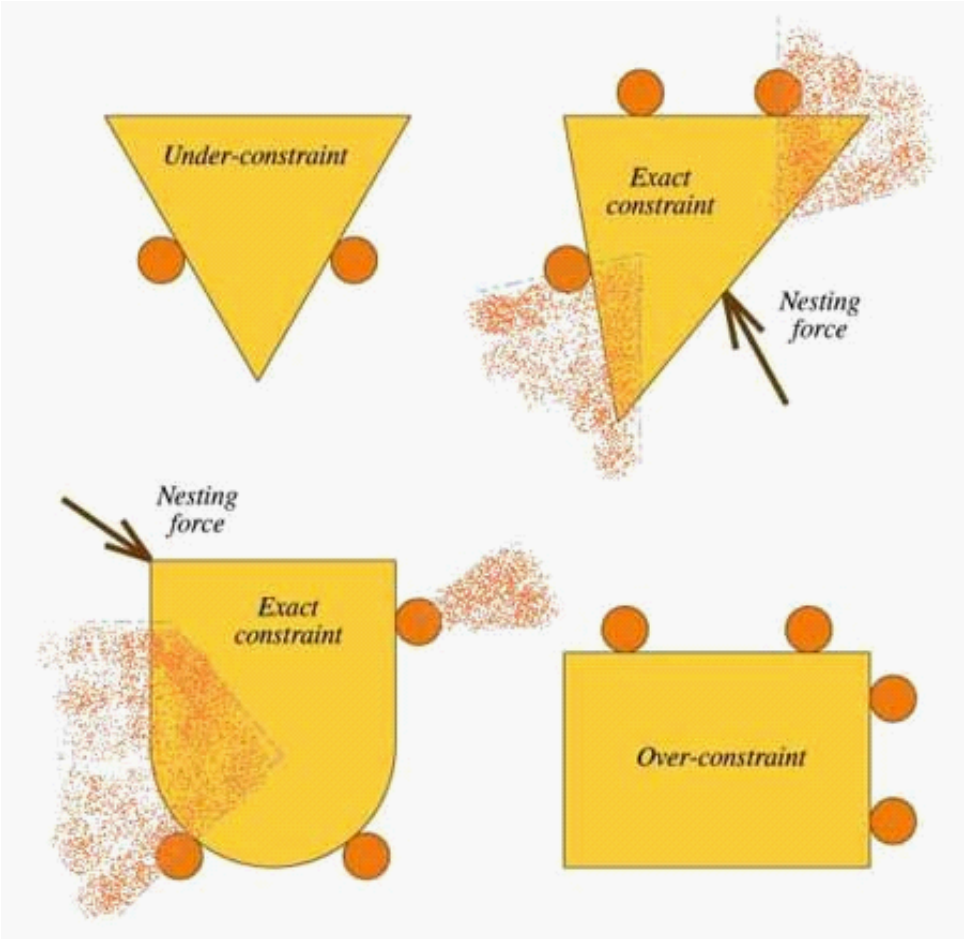

2D Overconstrained! (Form closed!)

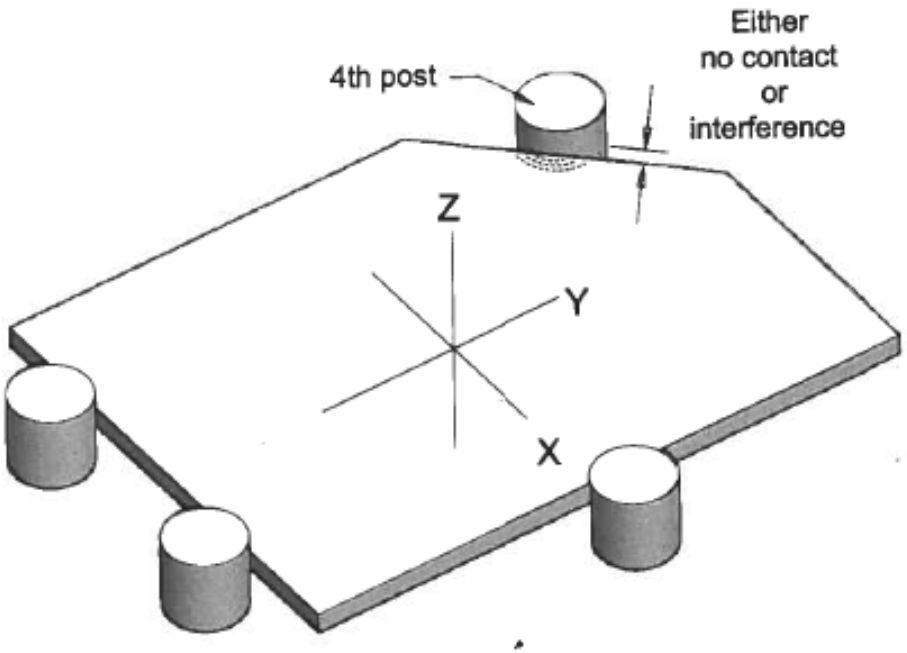

Figure 3-11 A fourth post is overconstrained and does not replace the nesting force.

3D Exact kinematic constraint diagram (basic how to)

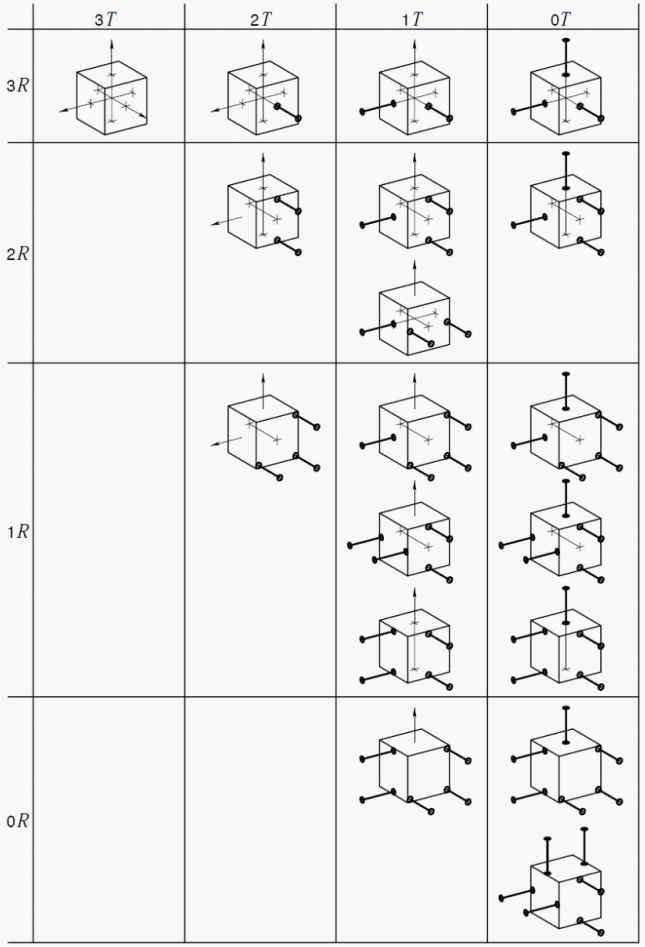

Figure 2-21 A matrix of desired rotational degrees of freedom (centerlines) and translational degrees of freedom (arrows) shows all possible orthogonal constraint arrangements, after [Blanding, 1992].

3D Exact constraint design example

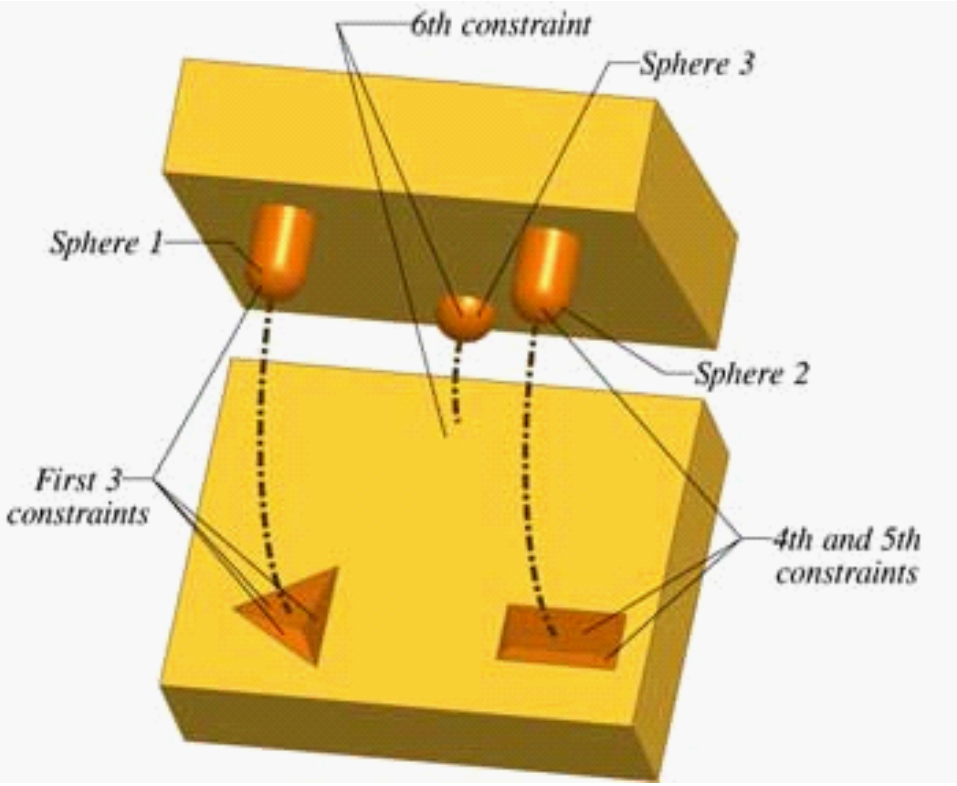

Applying a nesting force

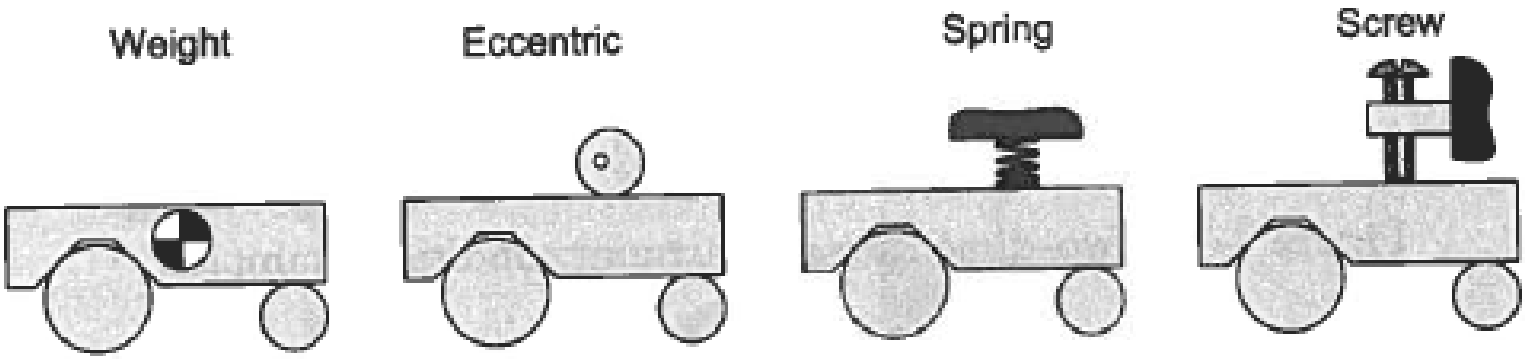

Figure 3-12 Example means of applying a nesting force. (Adapted from Blanding [12].)

The nesting force window

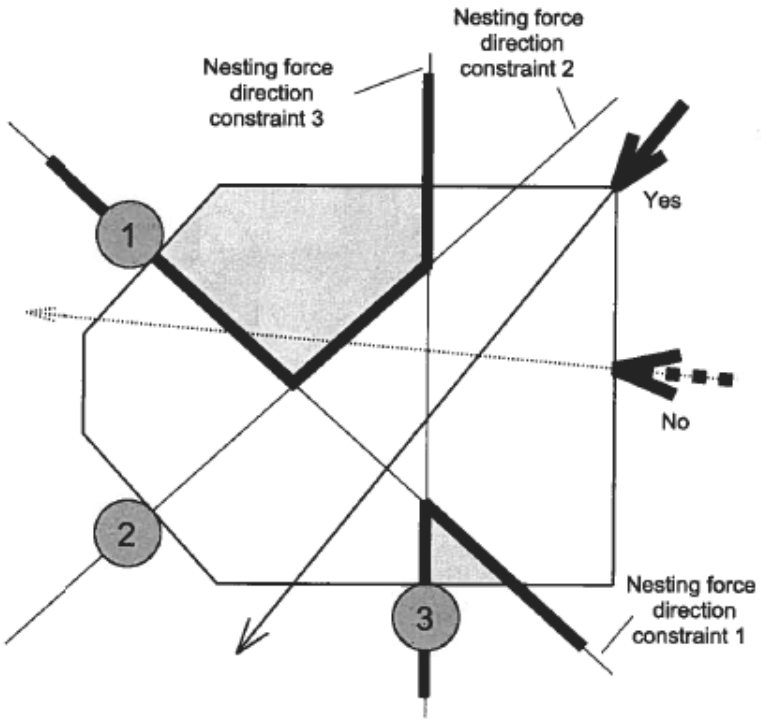

Figure 3-13 The nesting force window (unshaded area) in an exactly constrained block showing suitable (Yes) and unsuitable (No) nesting forces. Any force directed outside this window will not maintain contact at all constraints.

How to allow for a smooth linear/rotary movements?

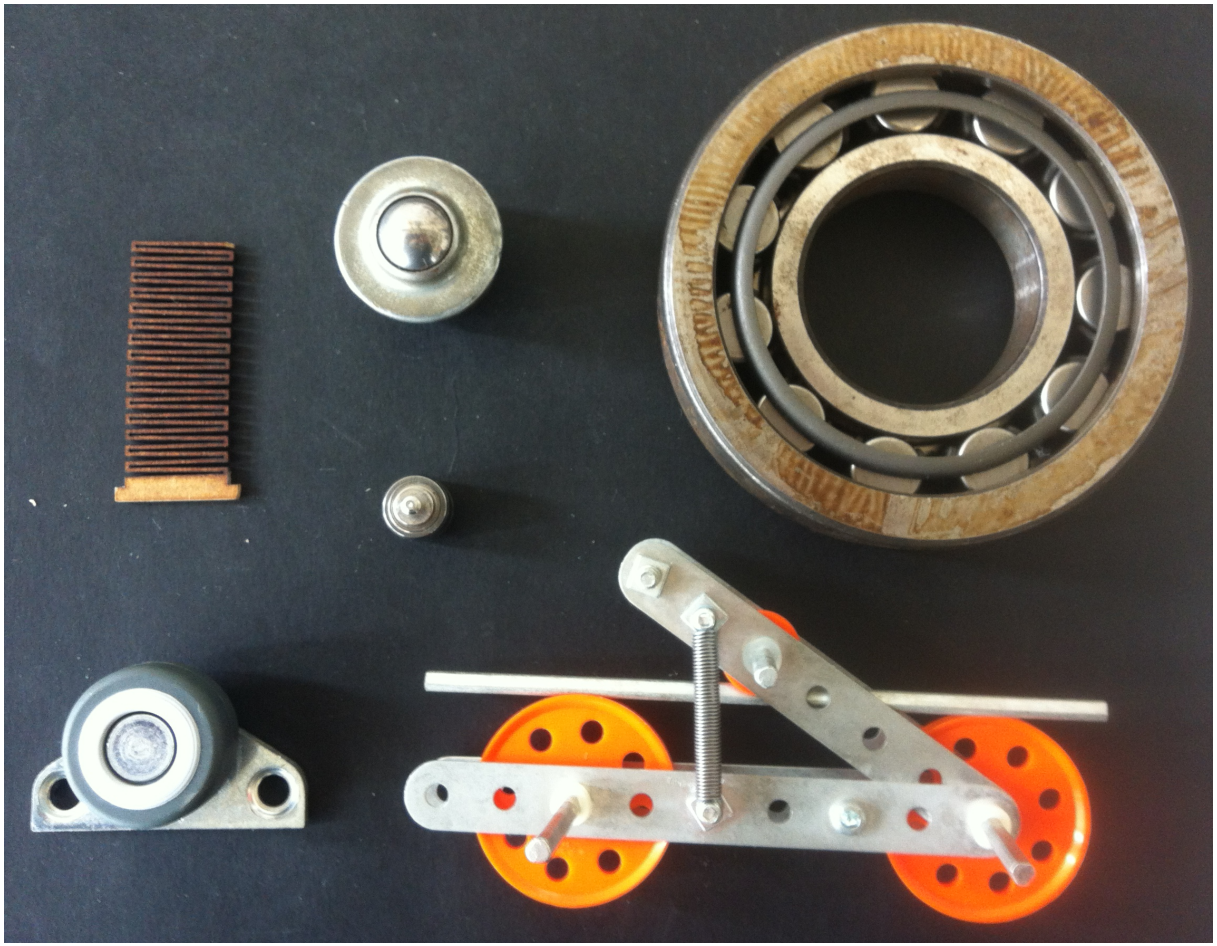

Curvature and surface matching

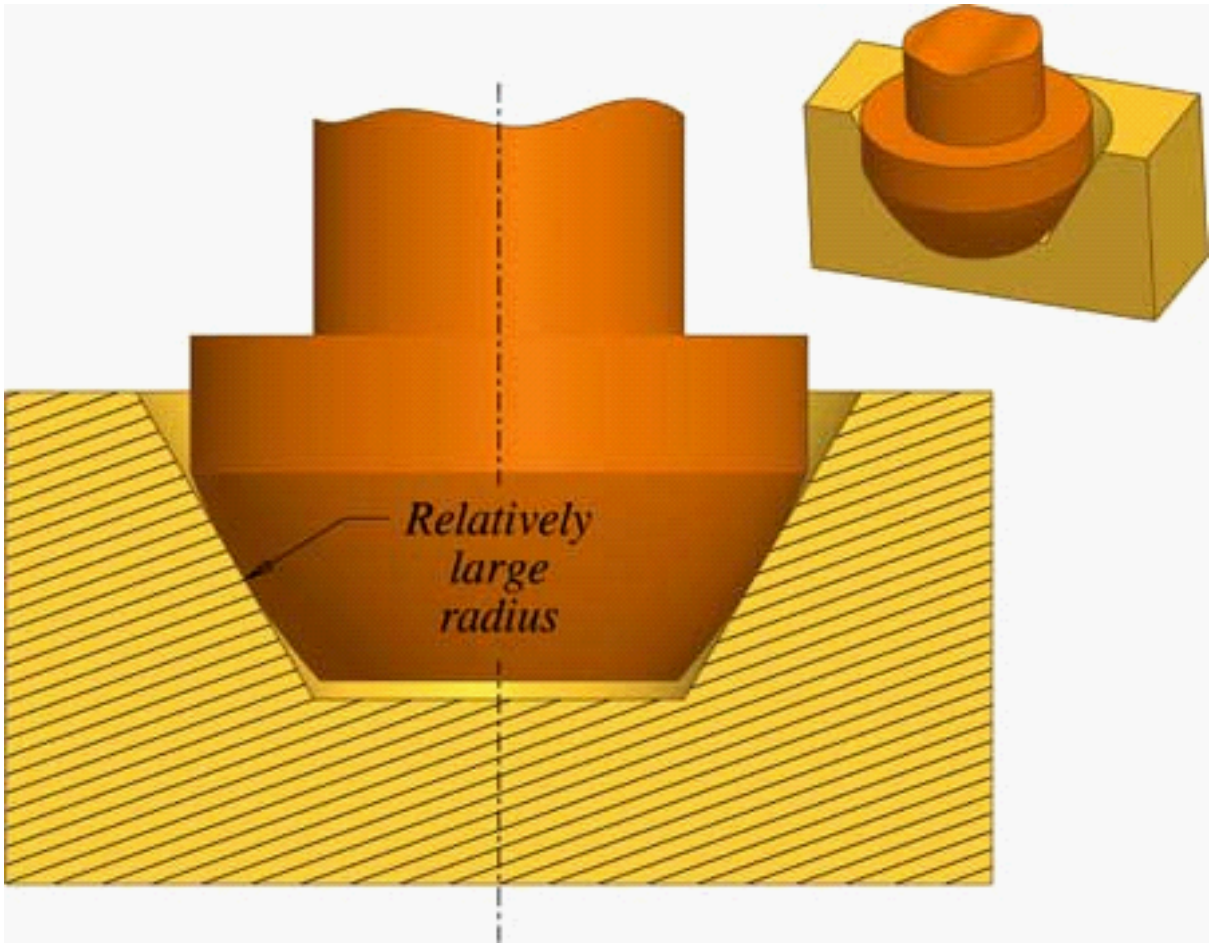

Take home message:

Use Exact Kinematic Constraint Design to generate Sound Mechanical Designs

Wobbling table

Elastic constraint design

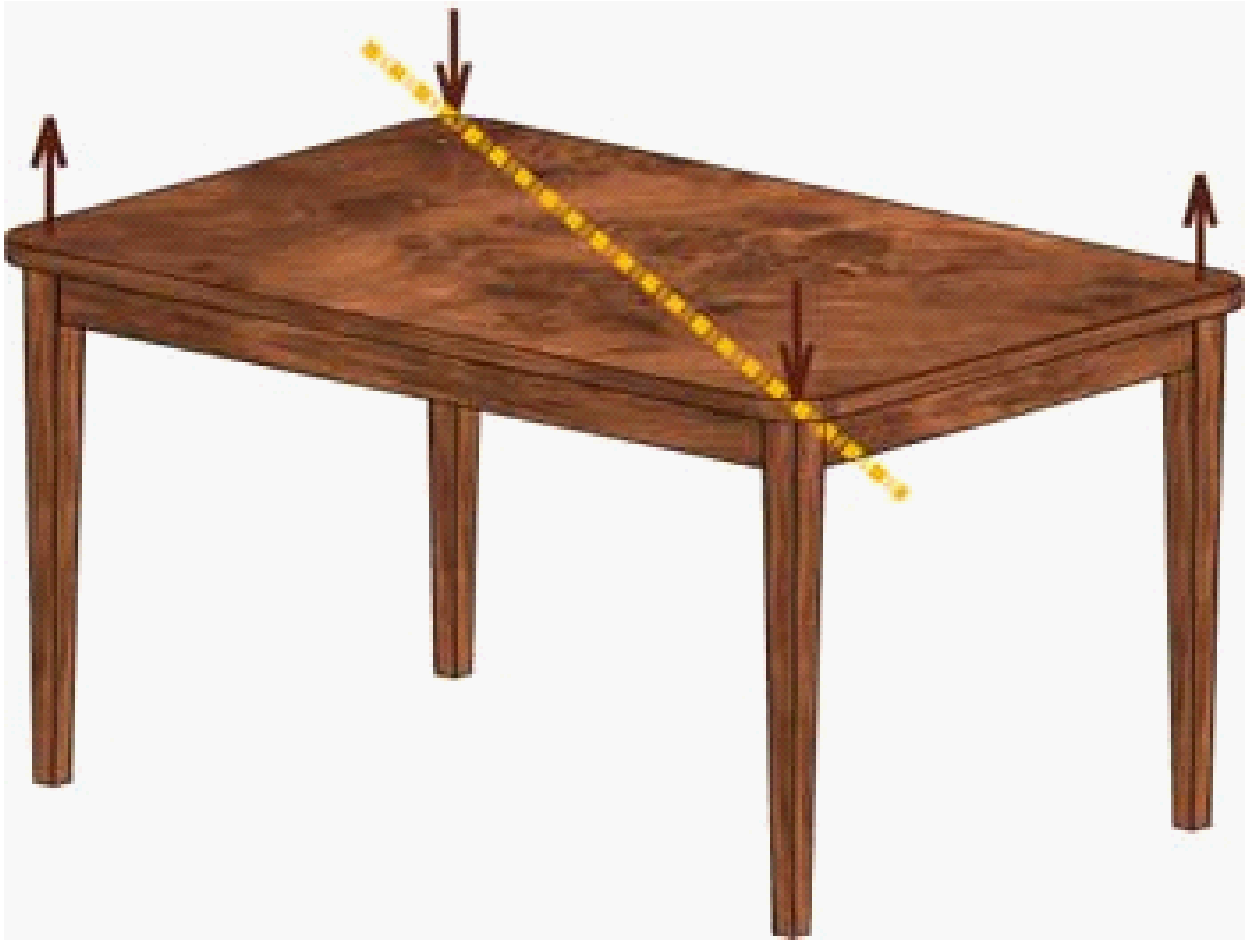

Elastic constraint design

Figure 3-17 Office chair with five legs shows elastic constraint design.

Elementary rules

Take home message:

Use Exact Kinematic Constraint Design to generate Sound Mechanical Designs

Plan the load path in parts, structures and assemblies

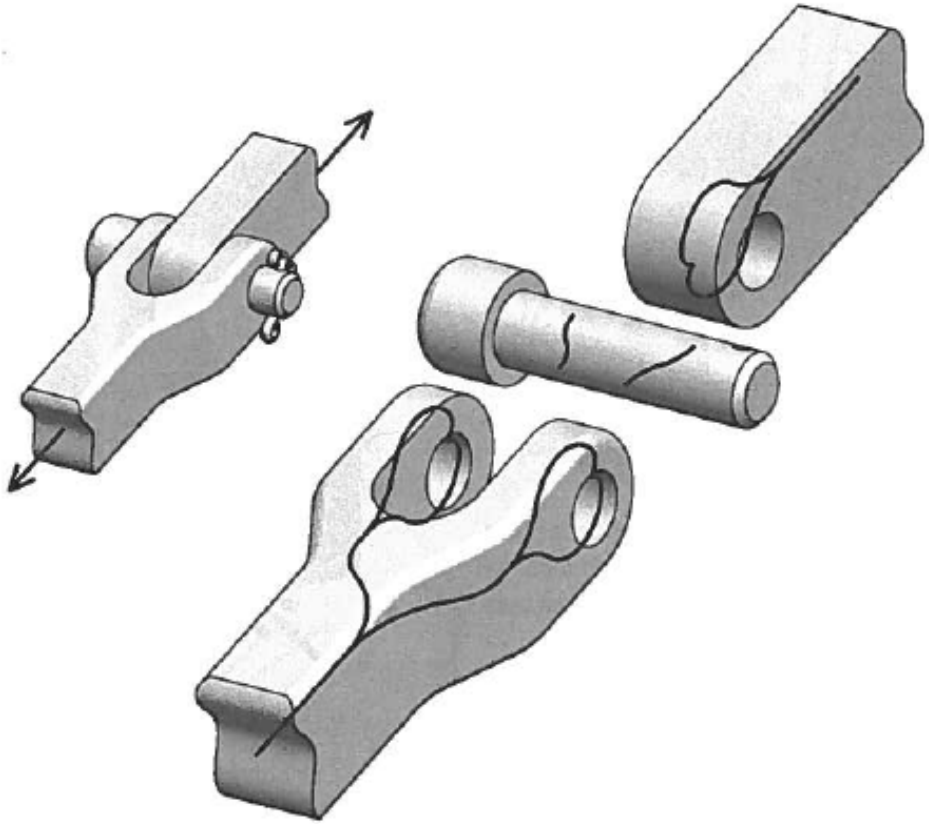

Figure 4-1 Load paths through a pinned clevis connection. The first step in planning the load path is visualizing it.

You want the load path to be:

1. Short
2. Direct
3. In a line, or barring that, in a plane
4. Symmetric
5. Non-redundant, or barring that, elastic
6. Locally-closed
7. (Easily analyzed)

Load path

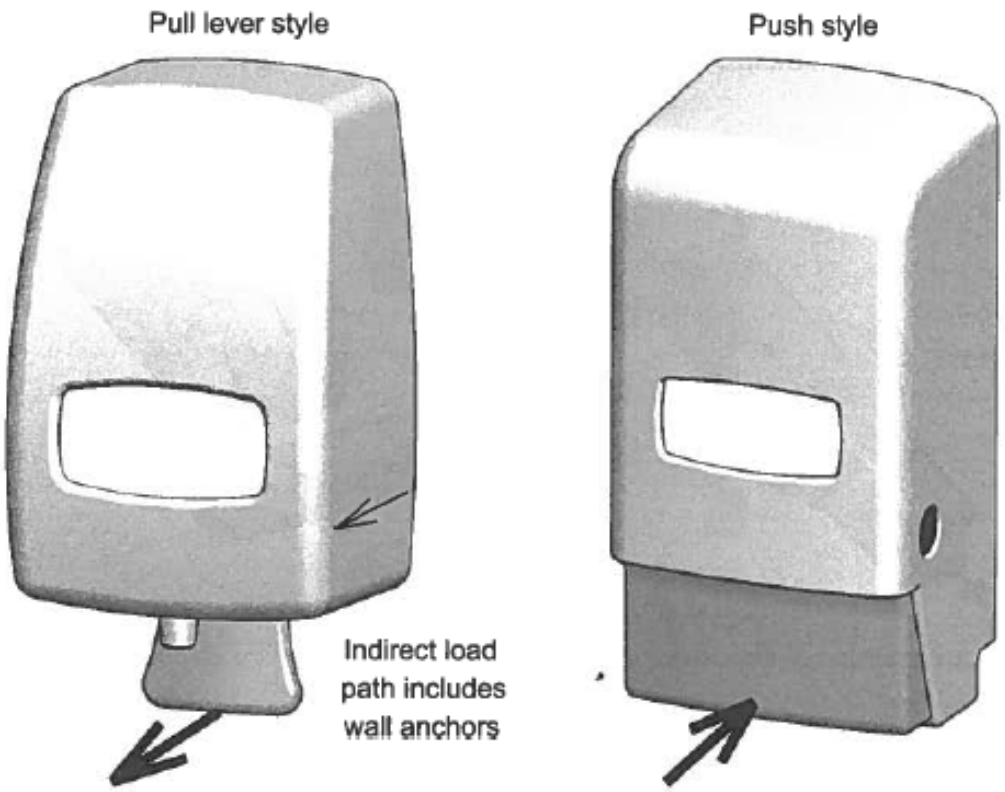

Figure 4-2 Wall-mounted soap dispensers. The load path in the push style travels more directly to the wall surface.

Locally-closed load path

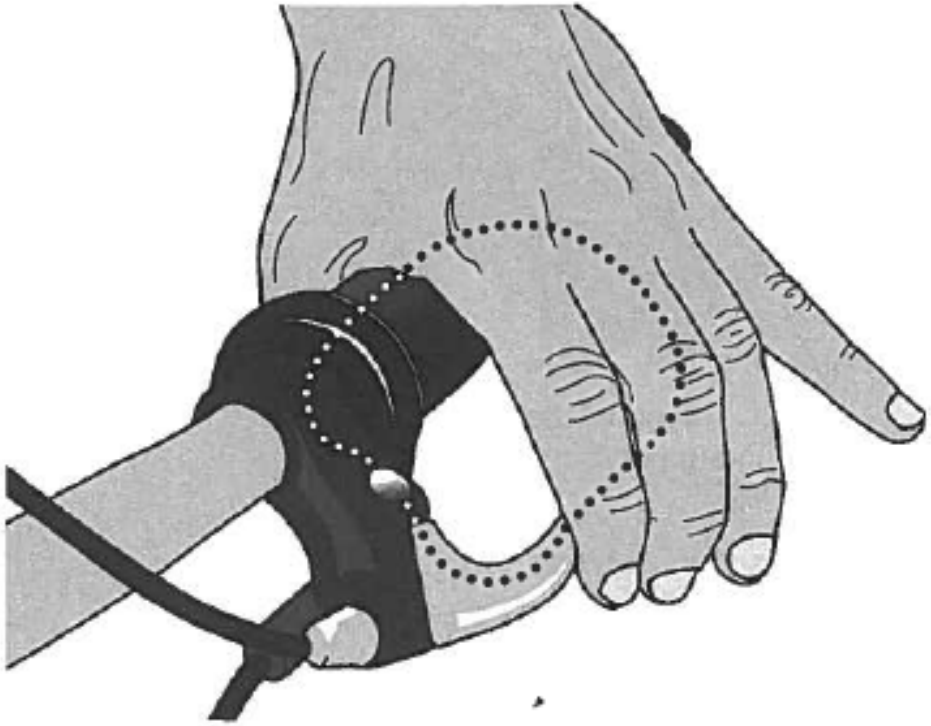

Figure 4-5 A bicycle hand brake is squeezed rather than pulled or pushed. The load path is locally-closed. Pulling rather than squeezing a bicycle hand brake would be perilous.

Force flow lines

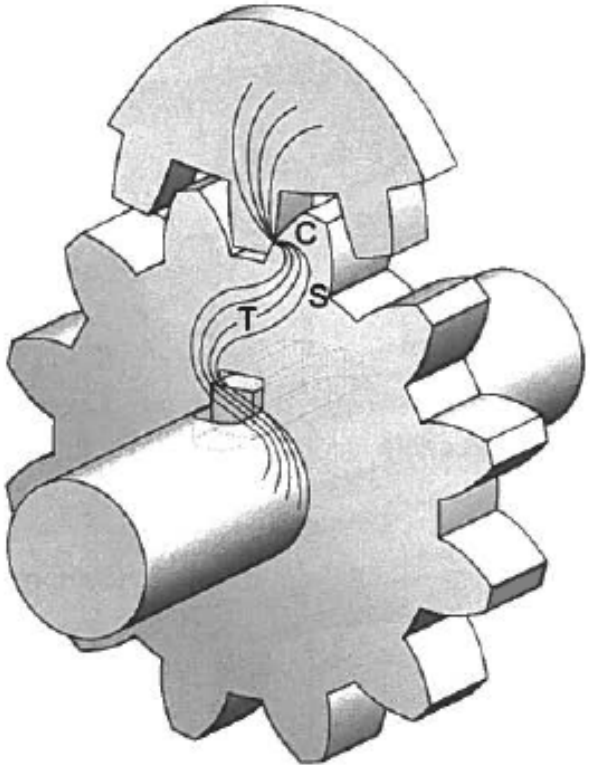

Figure 4-6 Detailed force flow lines in a gear set and keyed shaft. The lines can be labeled for tension, compression, and shear.

Take home message:

Plan the load path.

Elementary rules

Triangulate parts and structures to make them stiffer

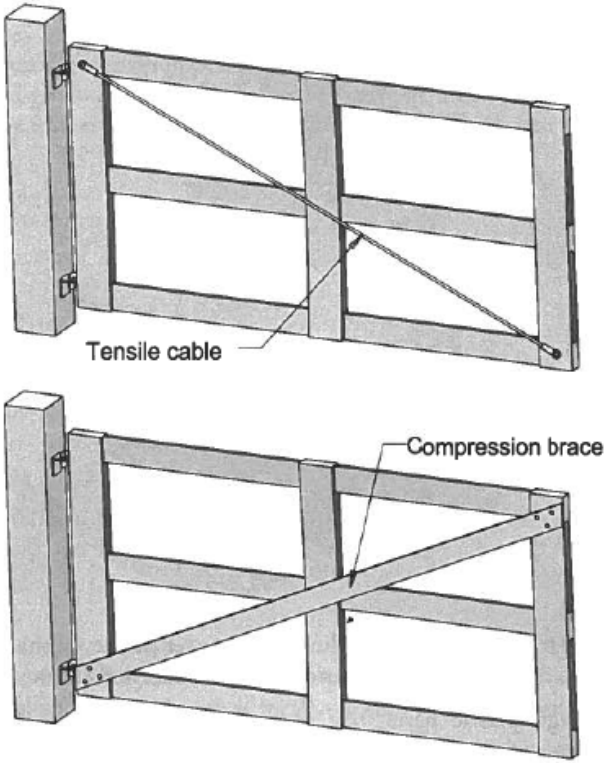

Figure 5-1 Swinging gates with triangulating tension and compression members. Structures without triangulating members rely on the rigidity of connecting joints between members for stiffness.

Triangulate to obtain stiffness

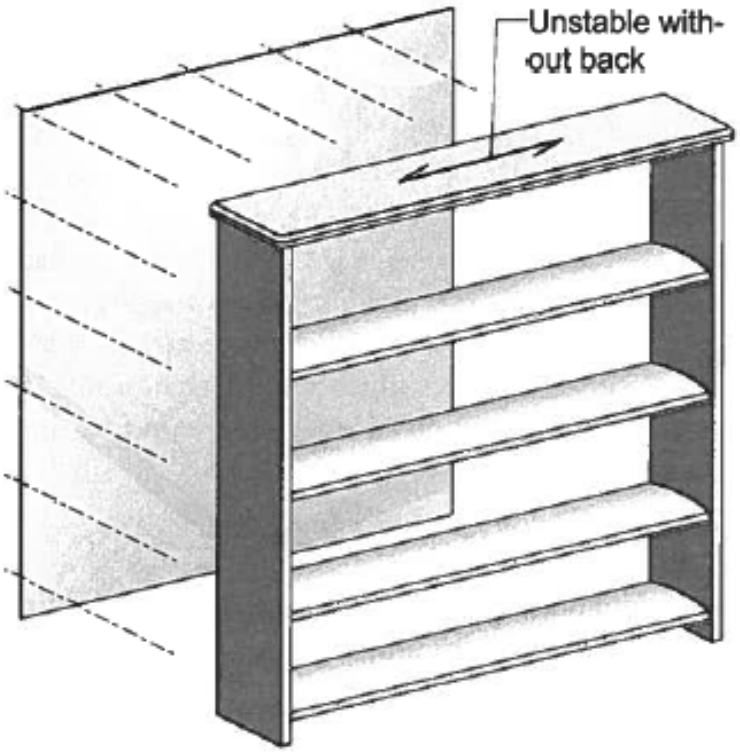

Figure 5-2 Bookcase with triangulating back. This bookcase will not collapse side-to-side, but still could twist corner-to-corner, an uncommon loading.

Flange to obtain stiffness

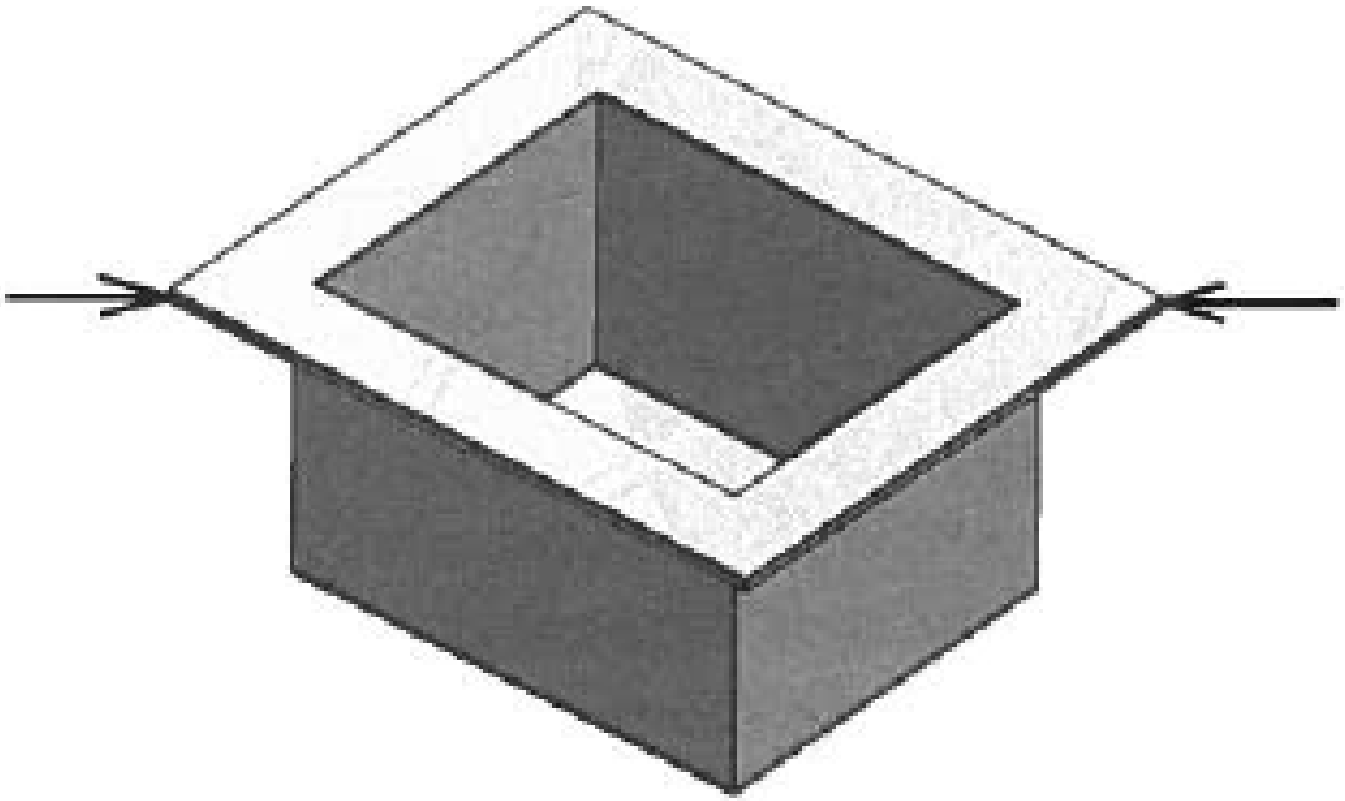

Figure 5-3 Open box with stiffening flange.

Ribs to obtain stiffness

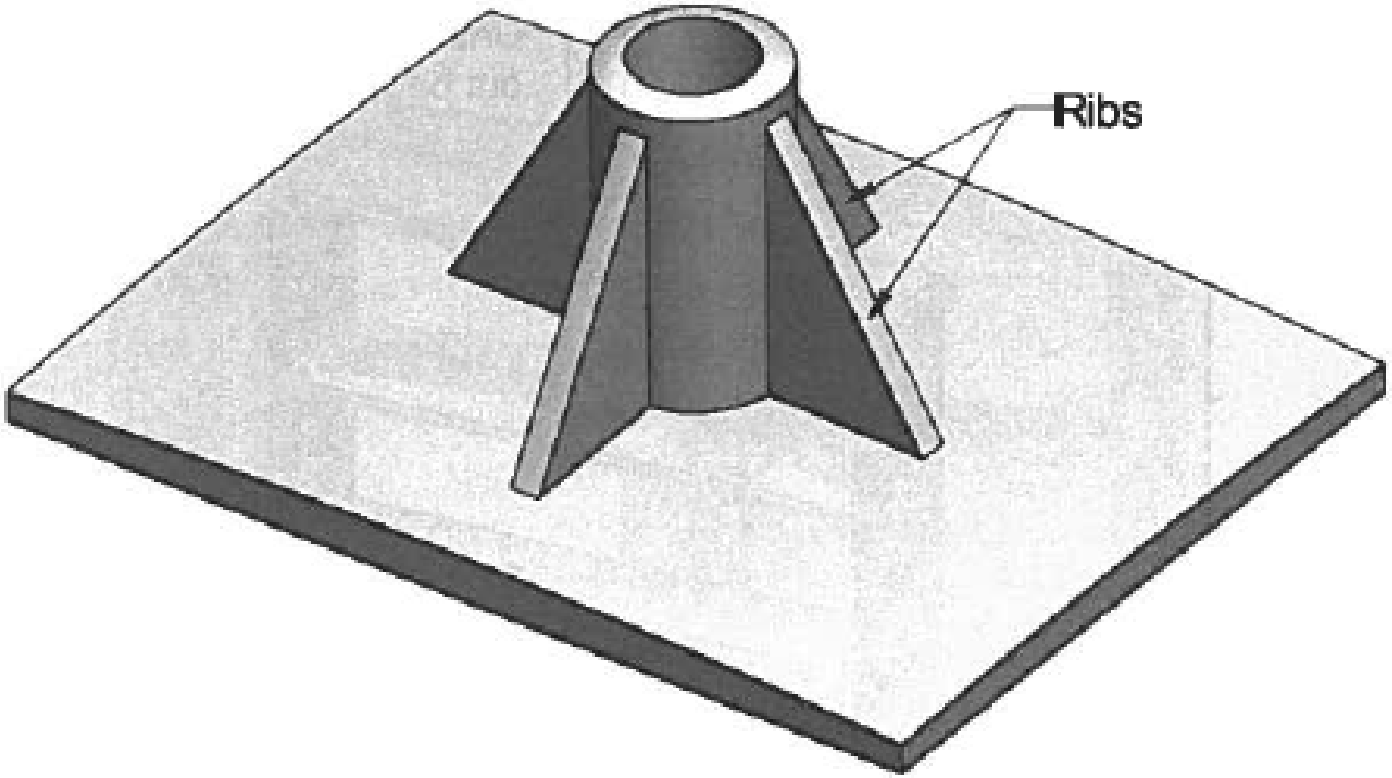

Figure 5-4 Triangulating ribs in a molded part. Molding and casting often require thin ribs and webs for strength or rigidity.

Tetrahedron: 3D triangulation

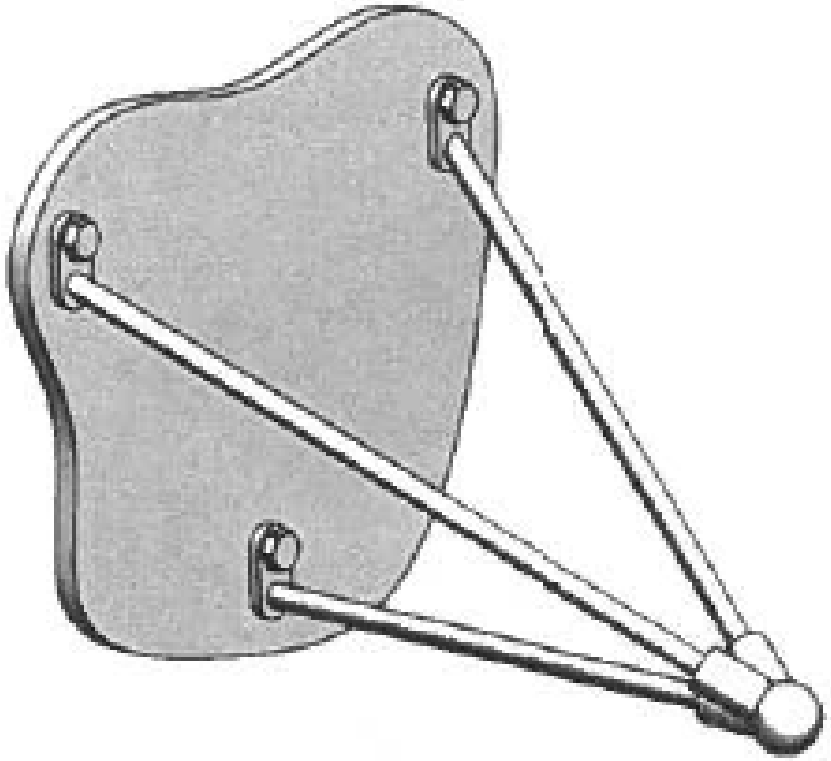

Figure 5-5 A tetrahedron: three-dimensional triangulation. Four triangles give three-dimensional rigidity.

◂ Elementary rules

Take home message

Triangulate to generate stiffness.

Elementary rules

Avoid bending stresses. Prefer tension and compression.

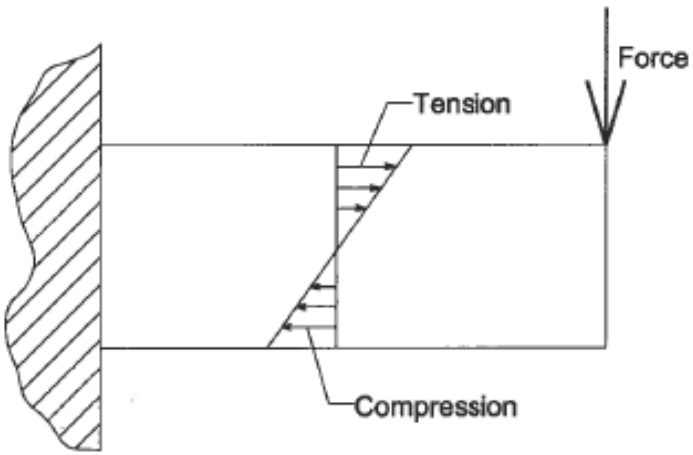

Figure 6-1 Stress distribution in a beam under bending load. Material at the midpoint of the section is unstressed and contributes nothing to strength or rigidity.

Optimal material use

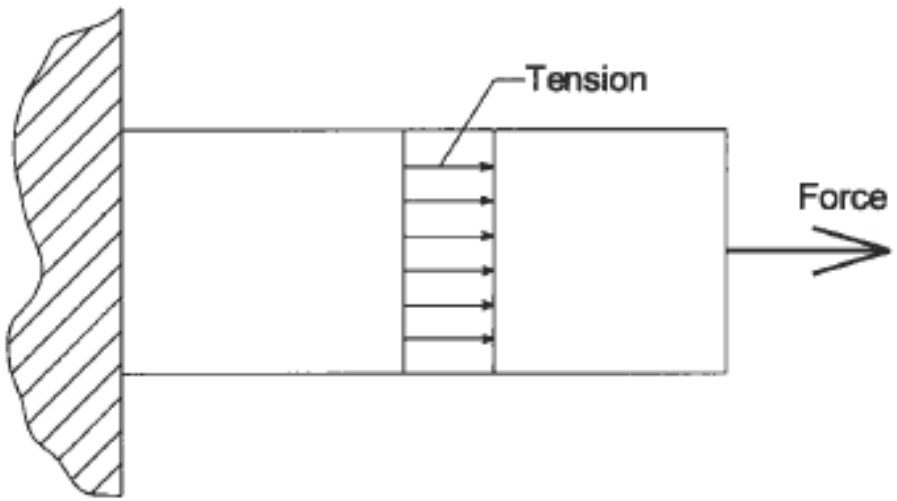

Figure 6-2 Stress distribution in a beam under tension. All material contributes to carry load.

Optimal material use

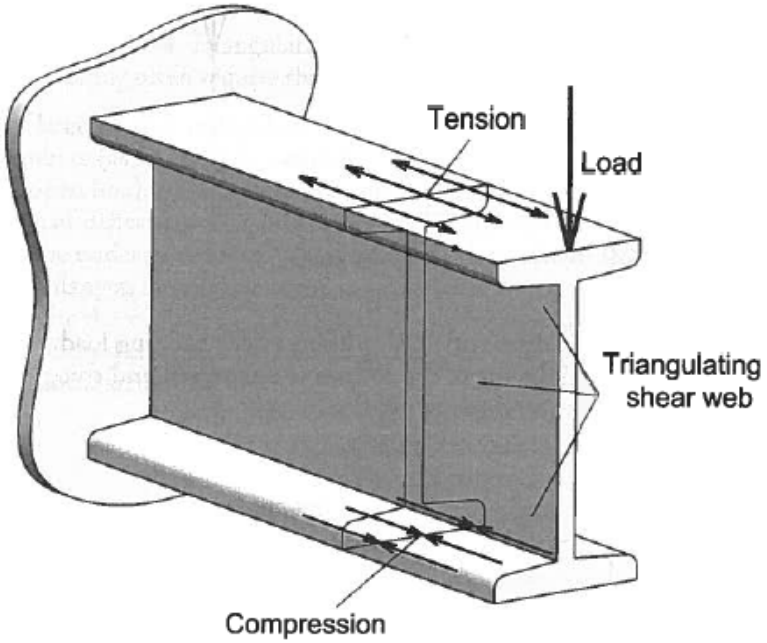

Figure 6-3 I-beams use material efficiently. The horizontal portions resist tension and compression. The vertical portion is a triangulating shear web.

Shear stress

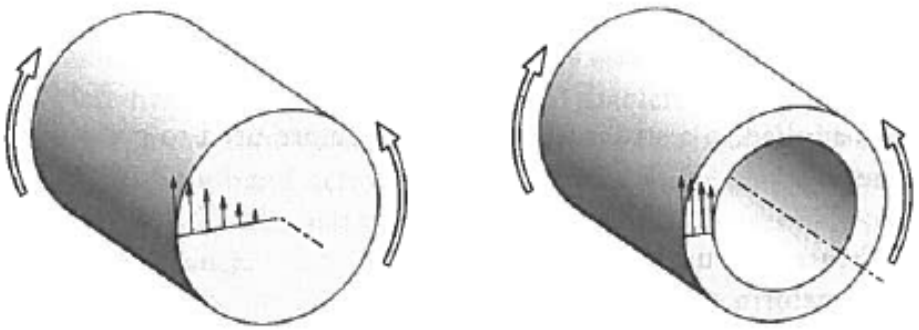

Figure 6-4 Shear stress distributions in solid and hollow torsion shafts. Material near the center of a solid shaft carries no load. Material in a thin, hollow shaft has nearly constant shear.

Take home message:

Avoid bending stresses. Prefer tension and compression.

Elementary rules

Flexibility needed use: bending or non-uniform torsional loads

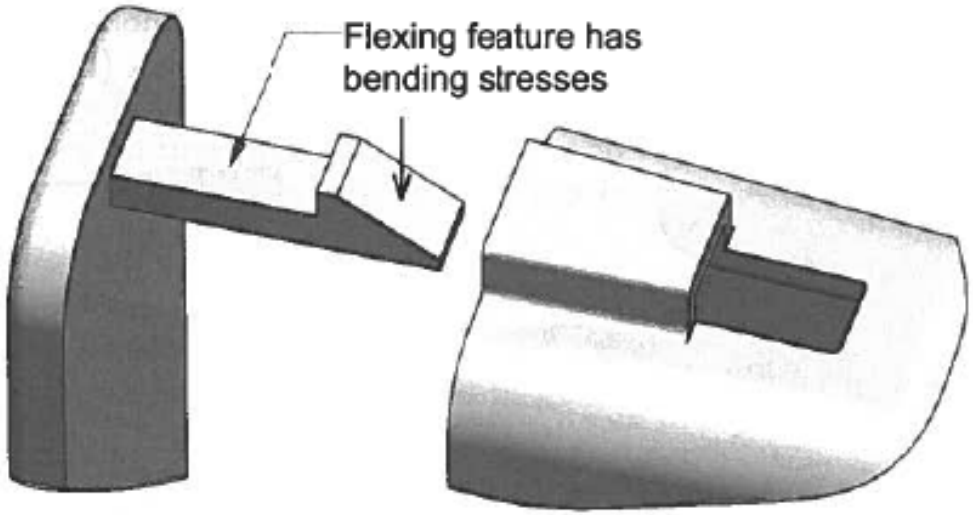

Figure 6-5 Bending is an advantage for parts requiring flexing: a cantilever snap fit.

Elementary rules

Improve designs with self-help

Use applied loads to improve performance:

1. Create new, useful forces
2. Transform or redirect themselves
3. Balance either themselves or existing loads
4. Help to distribute loads

Self-help that creates forces

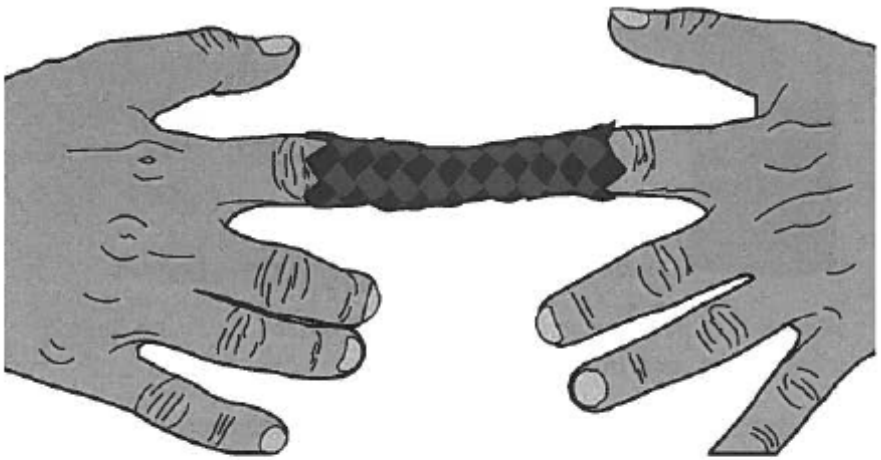

Figure 7-1 Chinese finger trap—an example of self-help that creates forces. The harder you pull, the tighter it grips.

Self-help that redirects forces

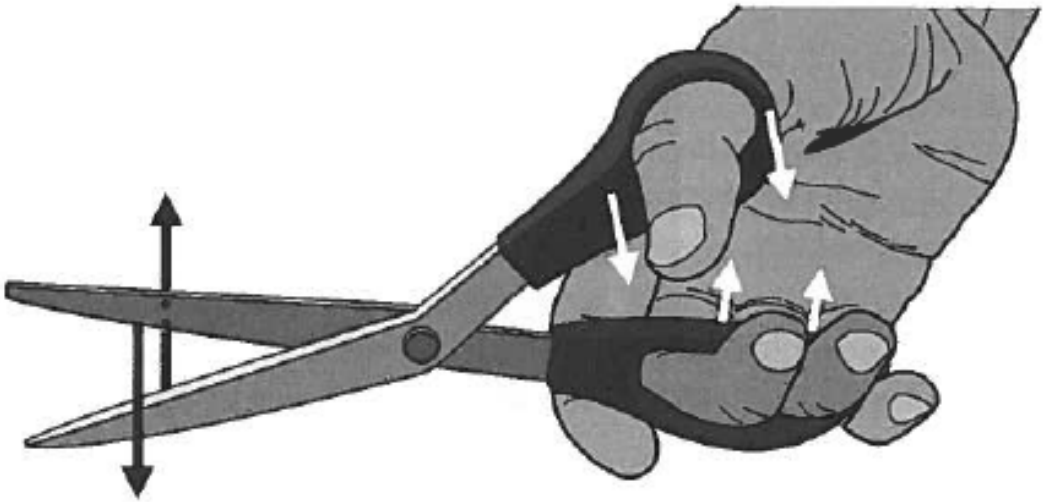

Figure 7-2 Self-help in a scissors. Normal hand action forces the blades' cutting edges together. Left- and right-handed scissors are mirror images of each other, improving the scissors' shearing action for either user.

Self-help that balances forces

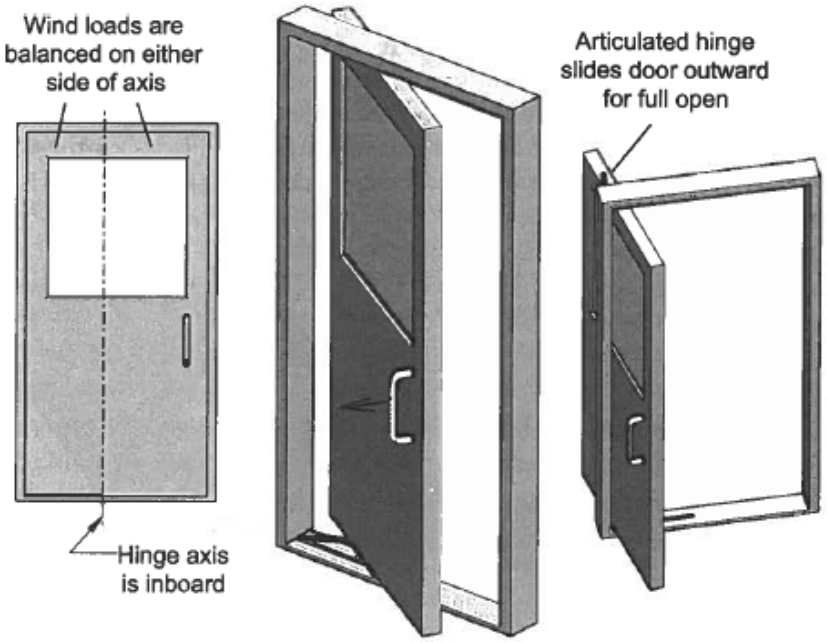

Figure 7-3 A balanced door with an articulated hinge exhibits self-help. Wind will not open this door, yet it opens easily in strong winds.

Self-help that distributes loads

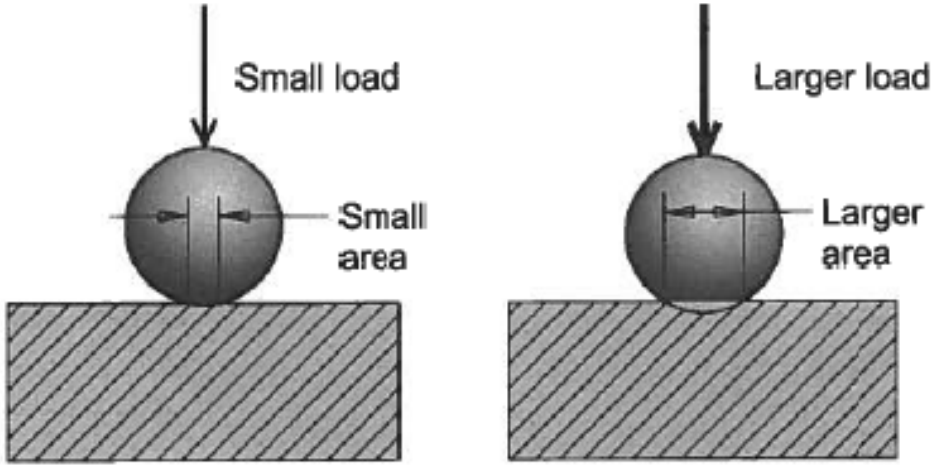

Figure 7-4 Hertzian stress: simple load-distributing self-help. The larger the load, the larger the contact area.

Elementary rules

Take home message:

Improve designs with self-help.

◂ Elementary rules

Manage friction in mechanisms

1. Avoid sliding friction
2. Maximize the length of linearly guided components
3. Select rotary motion over linear motion
4. Use rolling element bearings whenever possible
5. Use flexures to eliminate friction

Take home message

Use friction deliberately or avoid it completely.

Deliberately used friction: guitar tuning

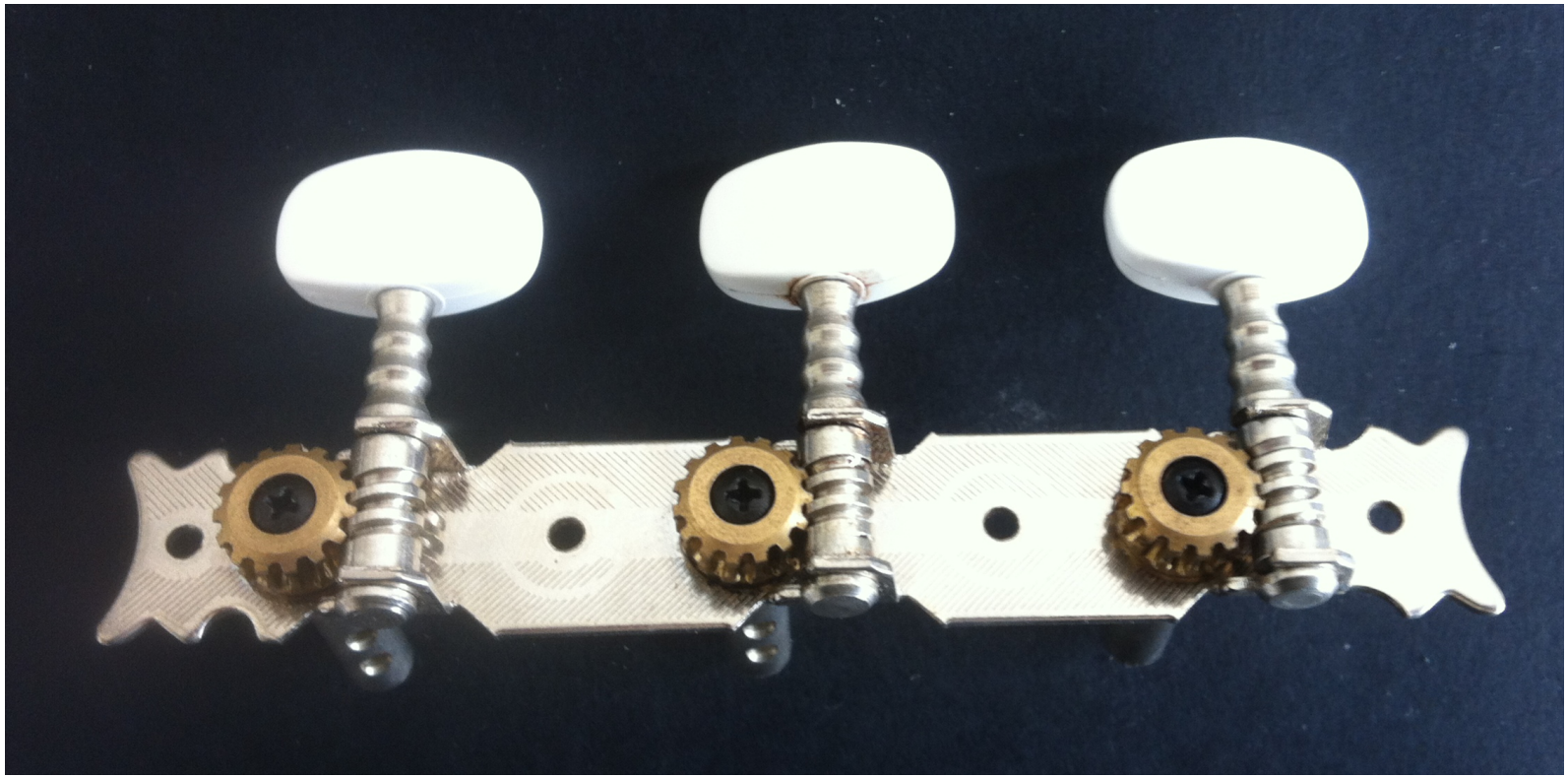

Avoid sliding friction

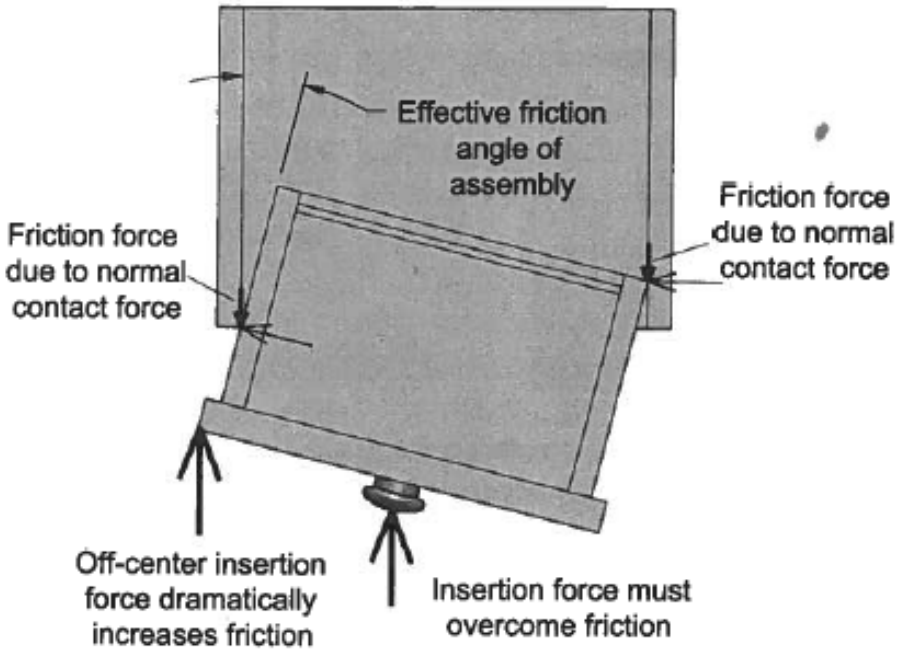

Figure 8-1 Diagram of friction angle and forces in a short, wide "sticky drawer."

Linear guided system (overconstraint design)

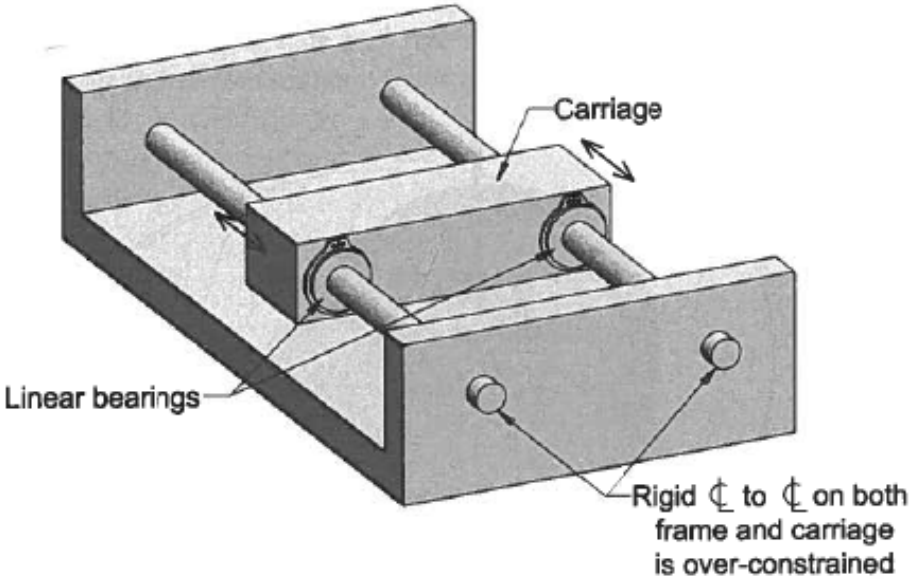

Figure 8-2 A poor design for linearly-guided systems. The center-to-center distance is fully constrained two different ways, giving over-constraint.

Use rolling elements bearing

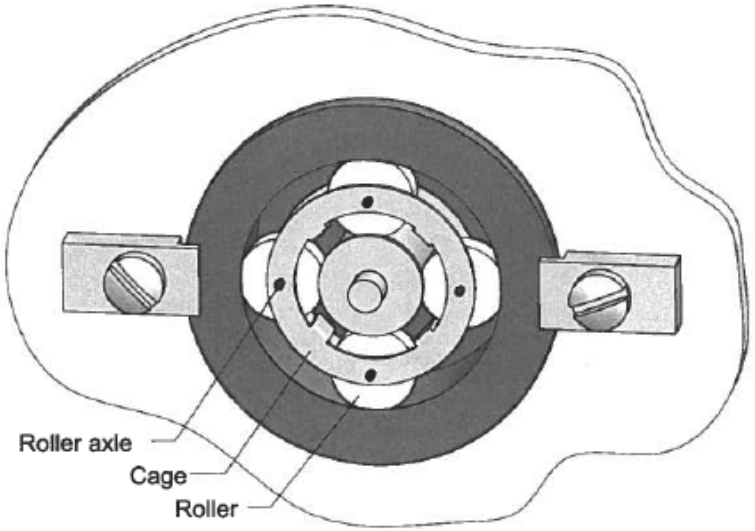

Figure 8-4 John Harrison's caged roller bearing. (Adapted from Andrewes [35].)

Select rotary motion over linear motion

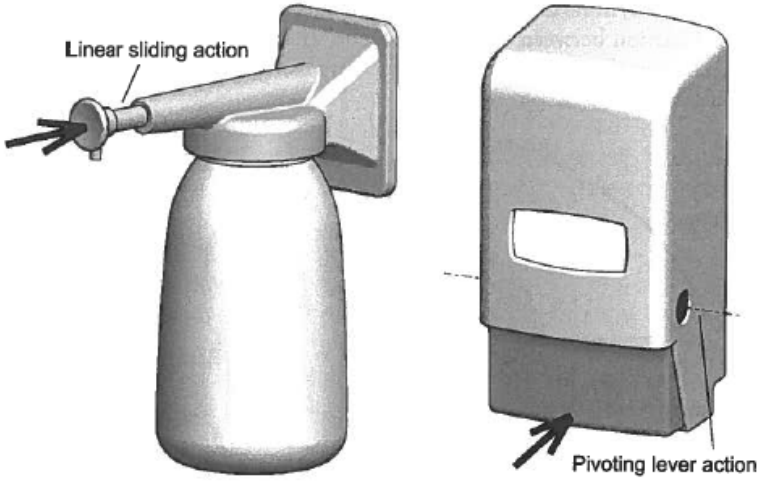

Figure 8-5 Plunger style versus lever-style soap dispenser. The lever-style has a natural advantage for managing friction.

Use flexures to eliminate friction

Figure 8-6 Triple spiral frictionless flexure for guiding axial displacement.

Elementary rules

Take home message

Use friction deliberately or avoid it completely.

◂ Elementary rules

Essentials of thought and procedure in mechanical design

- Use 3D solid models layouts
- Early ideation stage: use sketches
- Invert geometry to reveal new solutions
- Apply inversion
- Build prototypes of everything
- Separate strength from stiffness
- Never overlook buckling phenomena
- Analyze and test for trends and relationships
- Identify contingency plans

Contents

Use 3D solid models layouts

1. As an aid to thinking
2. For communicating design ideas

SOLID modelling why?

- Exceptional visualization
- Continuity of effort
- Unambiguous communication

3D solid modelling

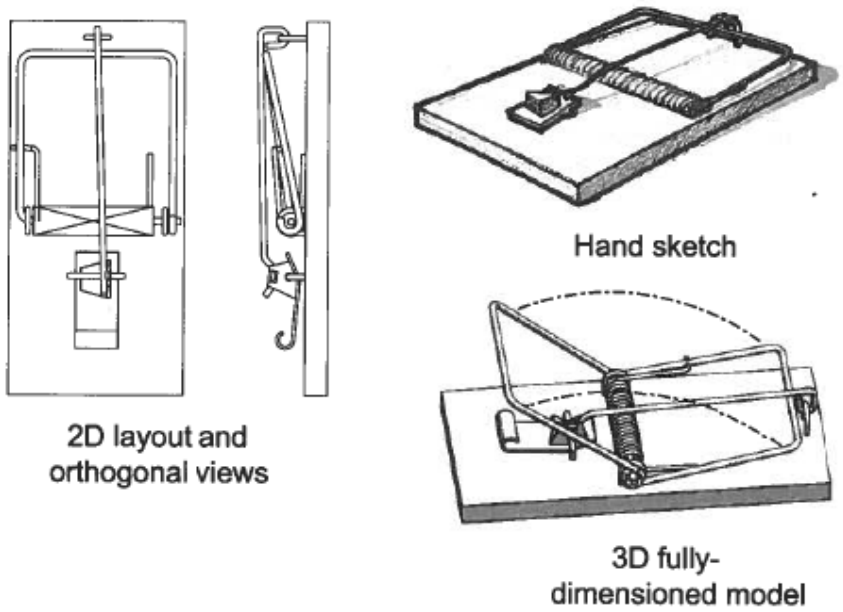

Figure 9-1 2D layout, 3D sketch, and 3D model. A fully-dimensioned 3D model captures more information than the other two.

Essential thoughts

Early ideation stage: use sketches

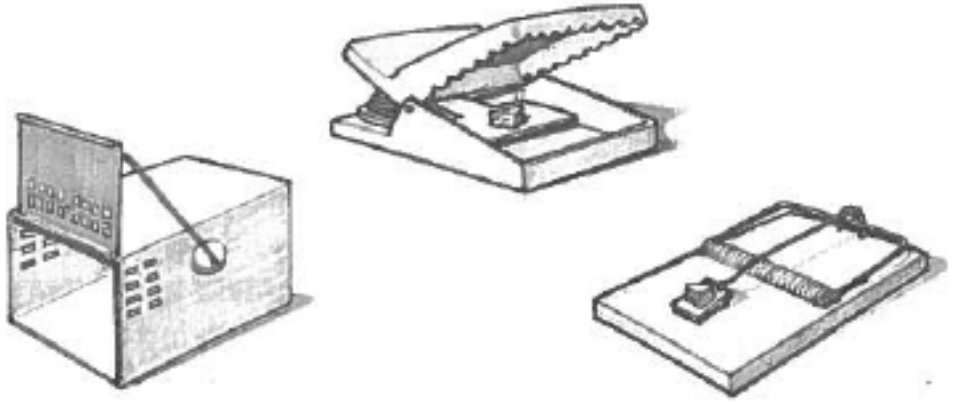

Figure 9-2 Sketches are valuable when generating multiple concepts. 3D CAD models are often unnecessary at the early ideation stages of a project.

Essential thoughts

Invert geometry to reveal new solutions

Formal techniques to generate needs, requirements, and concepts

- Quality Function Deployment
- Brainstorming
- TRIZ
- Particularly useful thought process: Inversion What happens if I flip things around, or over, or inside-out?

Essential thoughts

Inversion

- Inside $\rightarrow$ outside
- Right $\rightarrow$ left
- Above$\rightarrow$ below
- Symmetric $\rightarrow$ asymmetric
- In-line $\rightarrow$ offset
- Smaller $\rightarrow$ larger
- Parallel $\rightarrow$ normal
- Oblique $\rightarrow$ normal or parallel
- Concentric $\rightarrow$ eccentric
- Moving $\rightarrow$ stationary

Inversion cont.

- Pressure $\rightarrow$ vacuum
- axial $\rightarrow$ radial
- flat $\rightarrow$ curved
- bolt $\rightarrow$ nut
- peg $\rightarrow$ hole
- stiff $\rightarrow$ elastic
- translating $\rightarrow$ rotating
- 2-dimensional $\rightarrow$ 3D
- Mirror about a plane

Inversion example

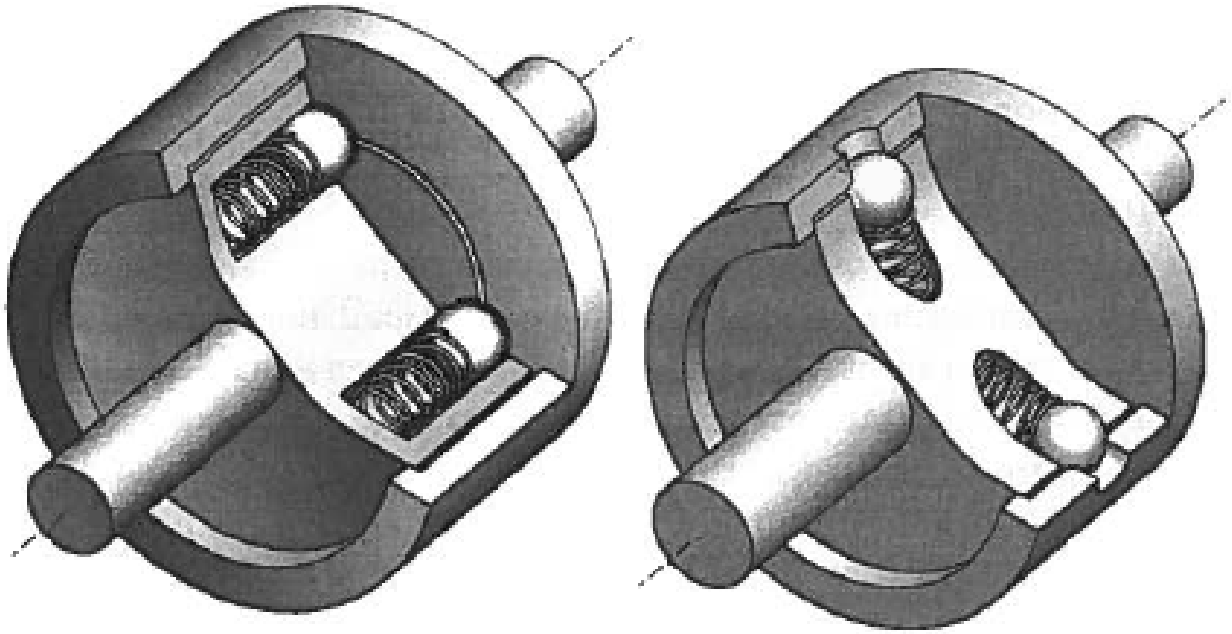

Figure 10-1 Spring clutch inverted from axial to radial orientation of springs and ball motion.

Essential thoughts

Build prototypes of everything but not all at once

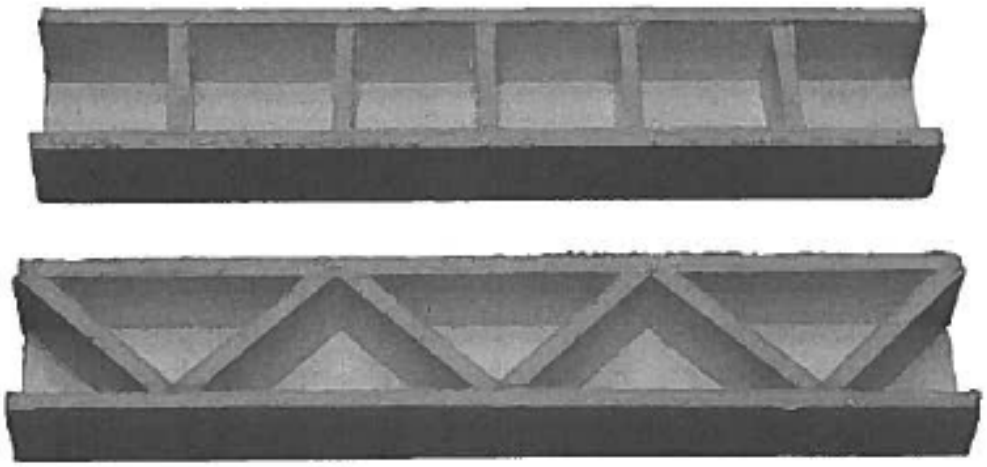

Figure 11-1 Structural prototypes from foam core board to compare 3D bracing of a torsion profile. These models can be tested for comparative performance.

Essential thoughts

Separate strength from stiffness

- Strength is how much load causes yielding or breaking. If something fails it is not strong enough! (σ_y)
- Stiffness, or rigidity, defines how much something deforms when load is applied. (E)

If something does not break, do not assume it is stiff enough for its purpose!

◂ Essential thoughts

Never overlook buckling phenomena

Catastrophic failures of man-made objects are often caused by buckling.

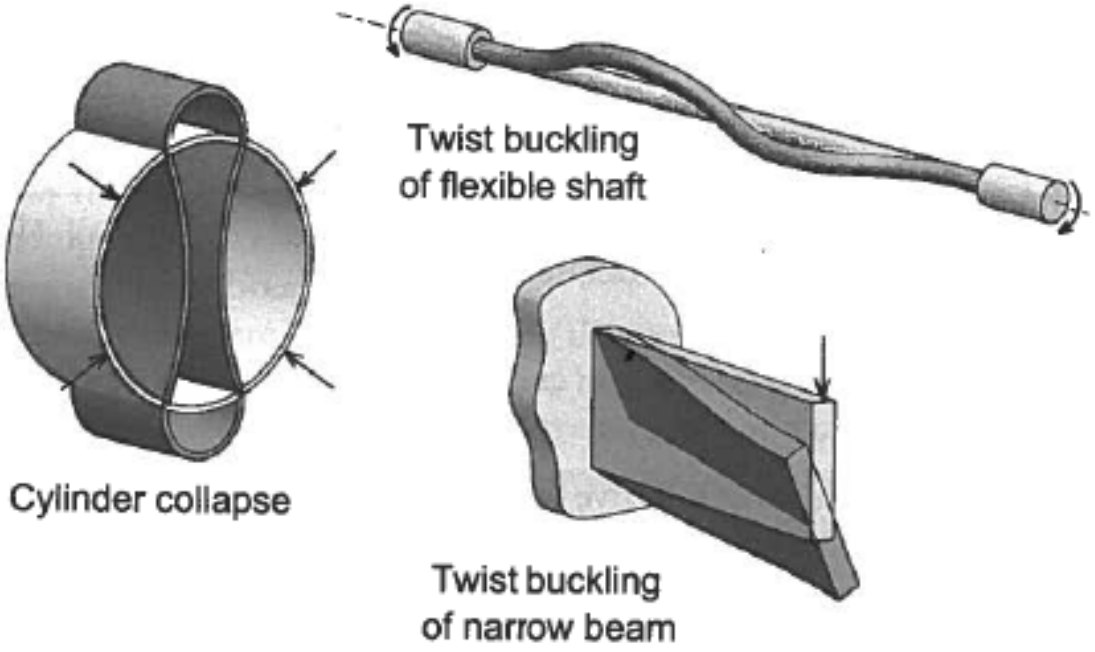

Figure 13-1 Buckling occurs not only in columns, but also in many other slender structures.

Essential thoughts

Analyze and test for trends and relationships

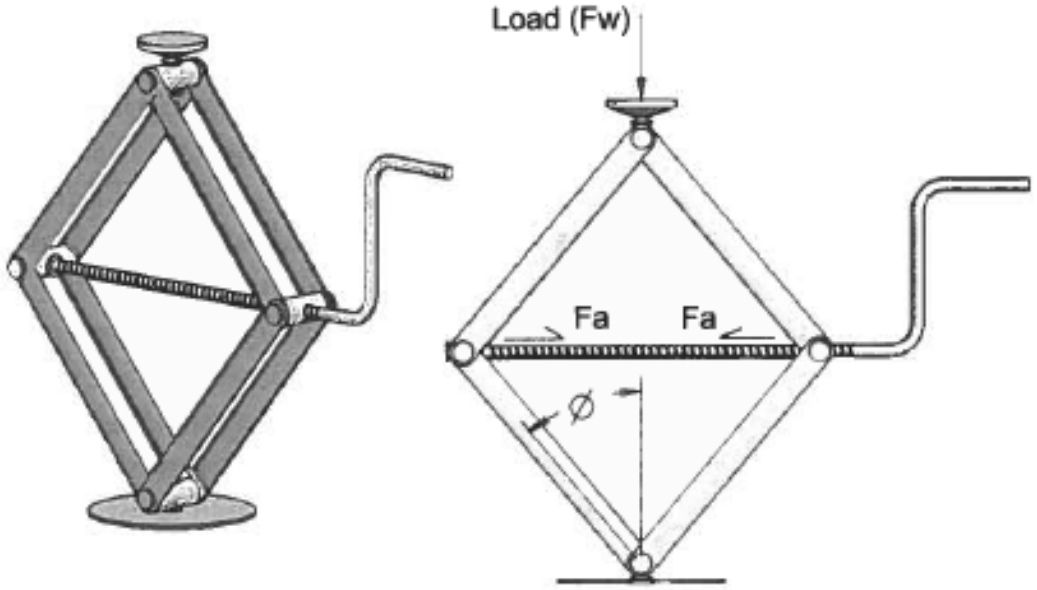

Figure 14-1 Scissors jack. Knowing relationships between parameters is a useful guide for design.

Essential thoughts

Identify contingency plans to minimize risks in design

Include as part of your design process :

- a review for anything that could go awry;
- anticipate possible failures and
- identify corrections
- Do not limit your definition of failure to hazards include: Function, robustness, production, service, and life

Essential thoughts

Some practical advice

- Avoid press fits
- Used closed sections or 3D bracing for torsional rigidity
- When designing springs use: ...
- Minimize and localize the tolerance path in parts and assemblies
- Include lead-ins in assembled designs
- Design assembles to be ...

Contents

Avoid press fits

- Are overconstrained
- Require tight tolerances
- Generate uncontrolled friction
- Create assembly stress
- Are hard to assemble

Alternatives for press fits

- Elastic fits
- Snap fits
- Tapered fits

Elastic fits as alternatives

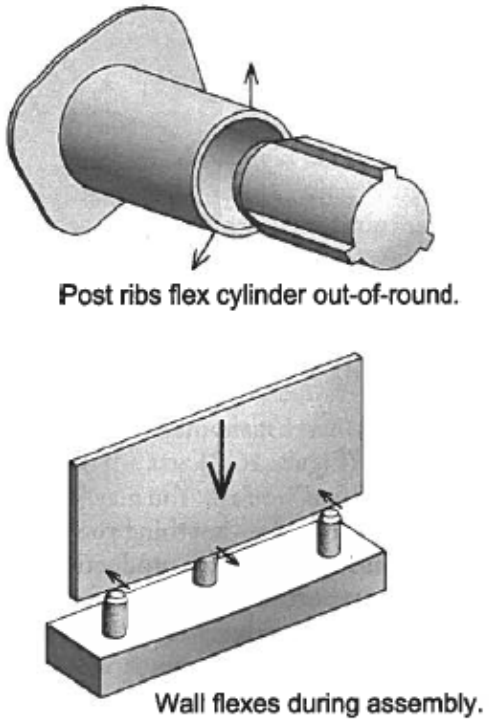

Figure 16-1 Elastic fits replace overconstrained press fits.

Snap fit as alternative

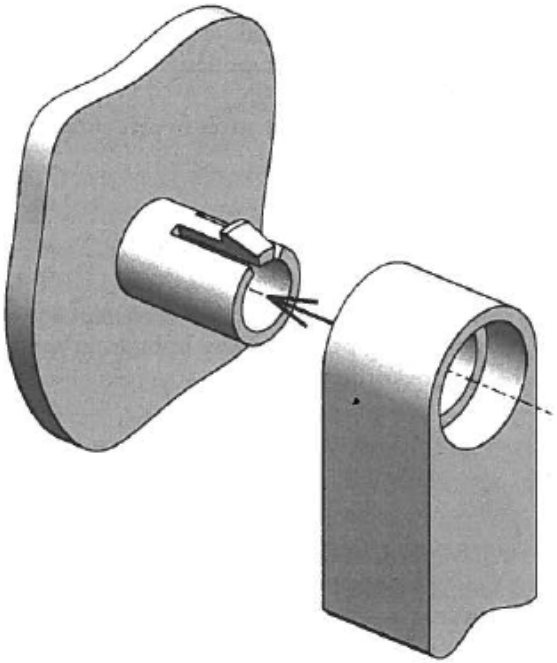

Figure 16-2 Snap fit post avoids the over-constraint of a press fit, and relaxes tight diameter tolerances.

Tapered fits

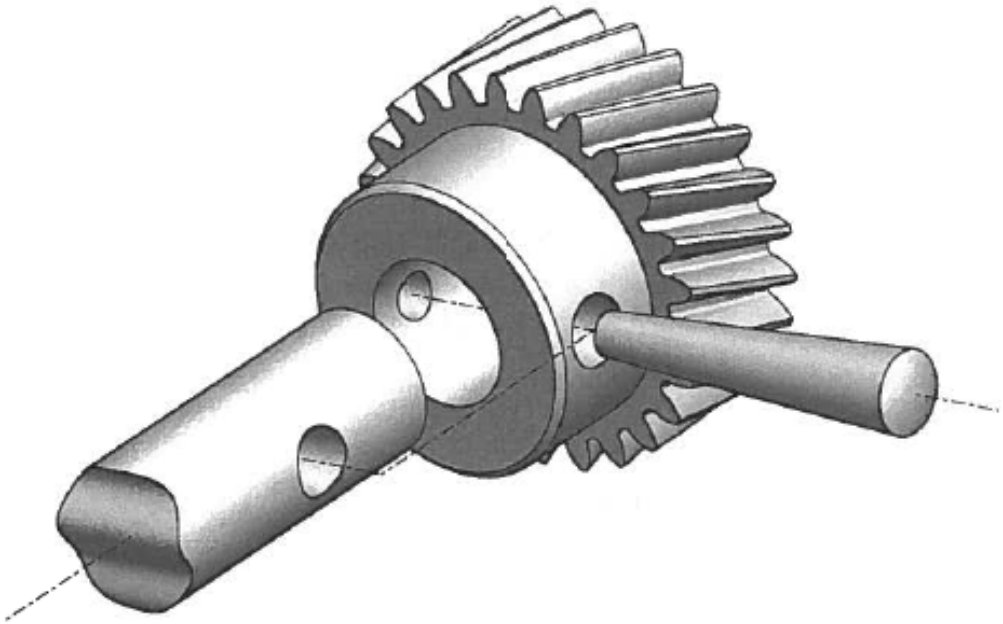

Figure 16-3 Tapered pin improves assembly, but does not eliminate over-constraint.

Practical advice

Used closed sections or 3D bracing for torsional rigidity

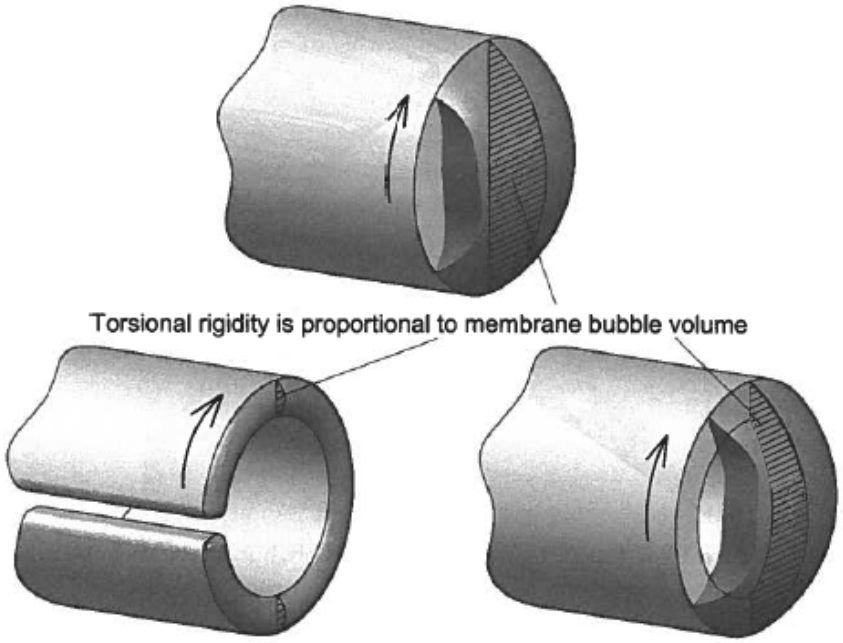

Figure 17-1 Membrane analogy for torsion of solid bar, thin-walled tube, and split tube. The relative torsional rigidity is proportional to the inflated membranes' volumes.

Practical advice

3D bracing for torsional rigidity

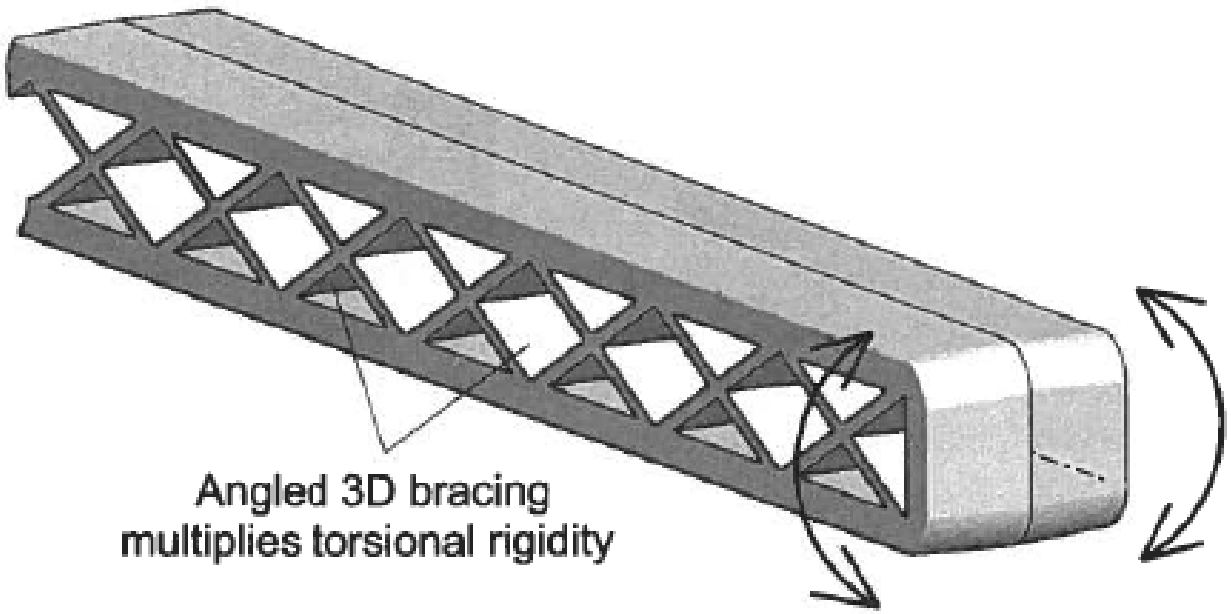

Figure 17-2 Three-dimensional bracing of open section for torsional rigidity. This is especially useful in cast and molded parts.

Practical advice

When designing springs use:

- A low spring rate and
- A high initial deflection
- Why: Springs exert force and store energy!

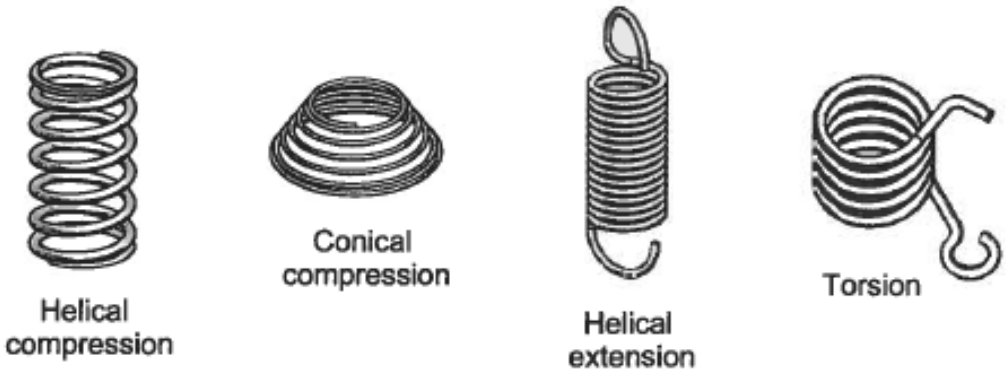

Figure 18-1 Common wound springs.

Load-deflection diagram

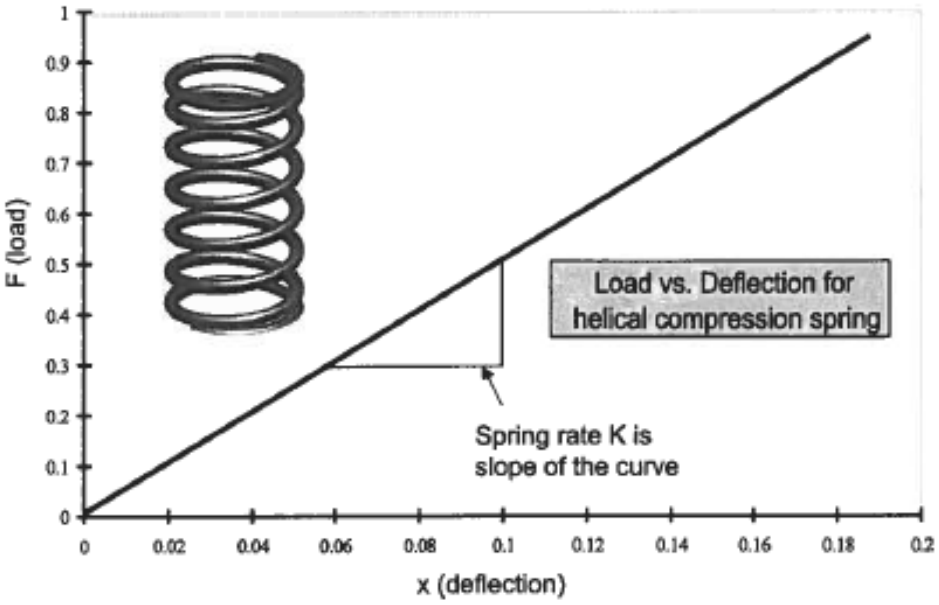

Figure 18-2 Load-deflection diagram for a helical compression spring.

Example

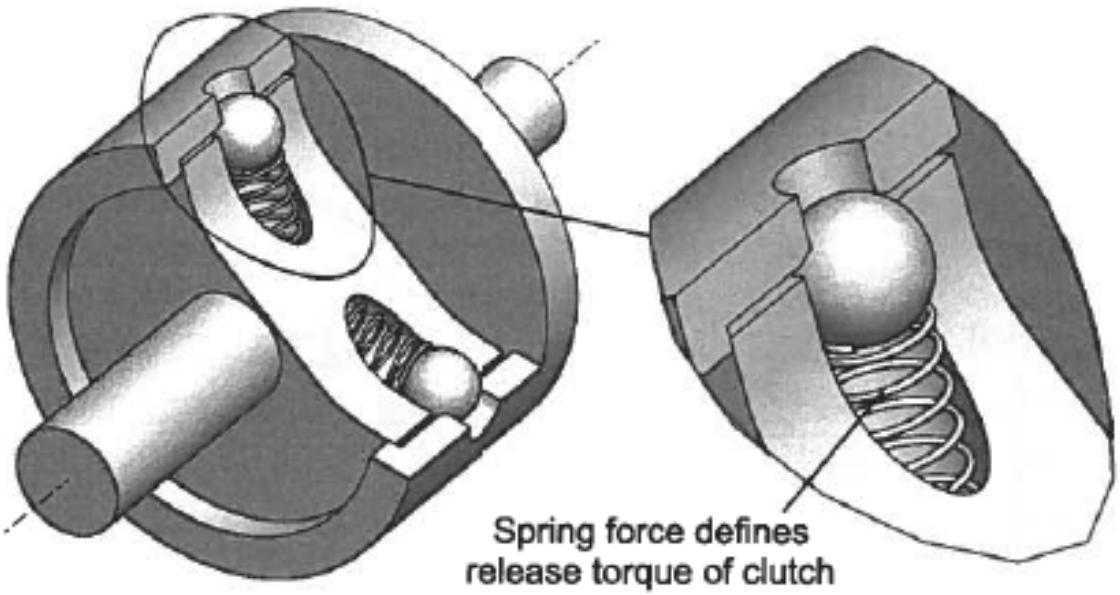

Figure 18-3 Torque-limiting spring clutch. The spring's rate, not just its force, is an important parameter in spring design. Lower spring rates are usually better.

Why low spring rates?

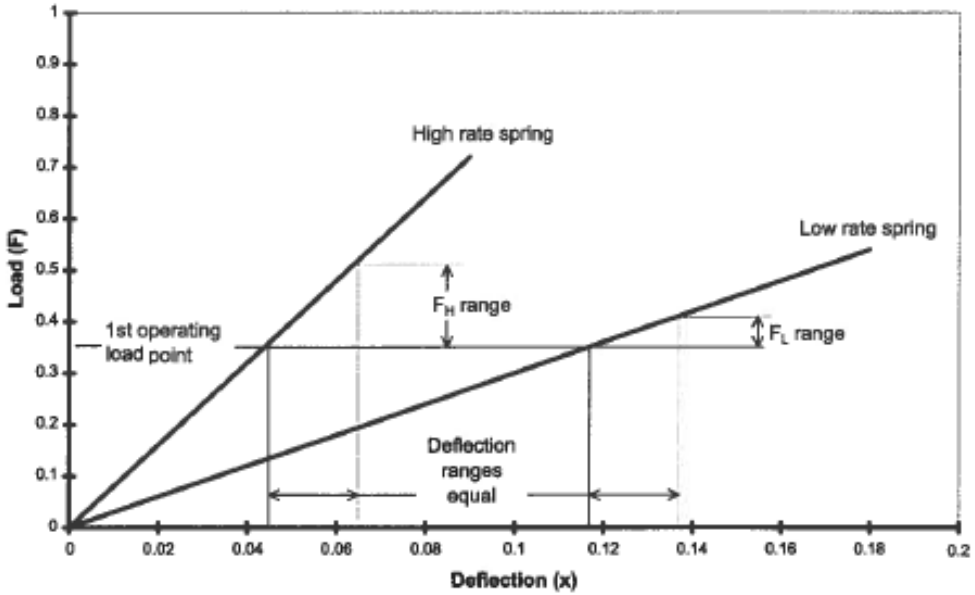

Figure 18-4 Force range vs. deflection range for different rate springs. Lower spring rates mean less force variation over the operating range.

Practical advice

Minimize and localize the tolerance path in parts and assemblies

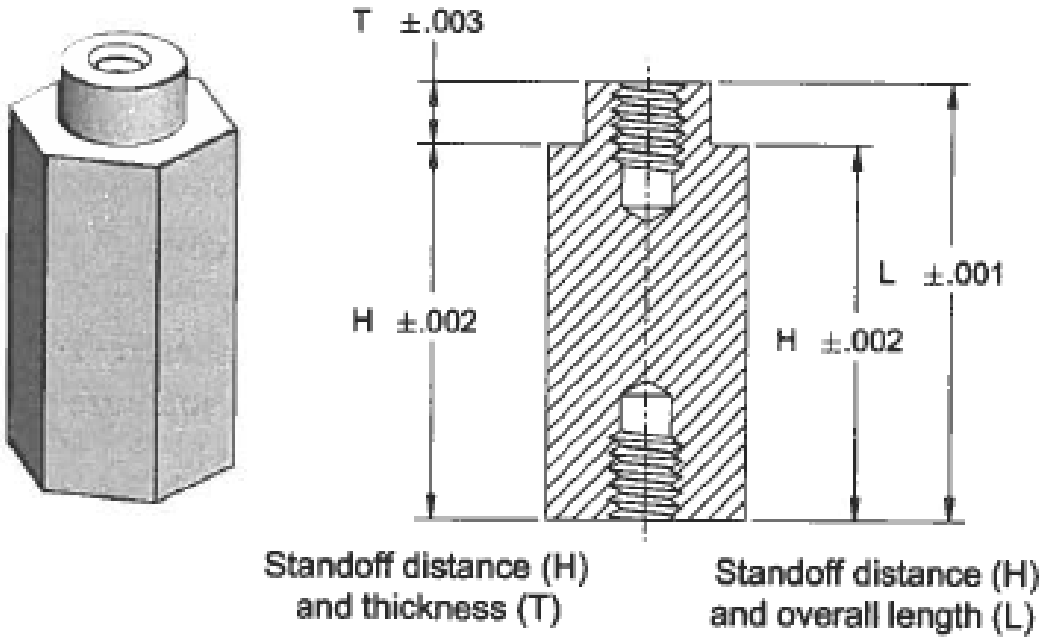

Figure 19-1 Two dimensioning schemes for a standoff.

Tolerancing

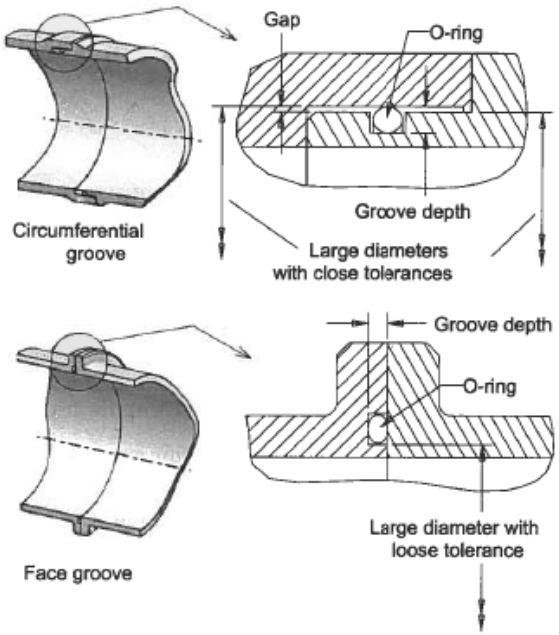

Figure 19-2 O-ring seal joint comparing circumferential with face seal dimensioning. The face seal's important dimensions are probably easier to manufacture.

Practical advice

Use mechanical amplification to reduce failures

An amplifier is any device that uses a small amount of something to control a larger amount

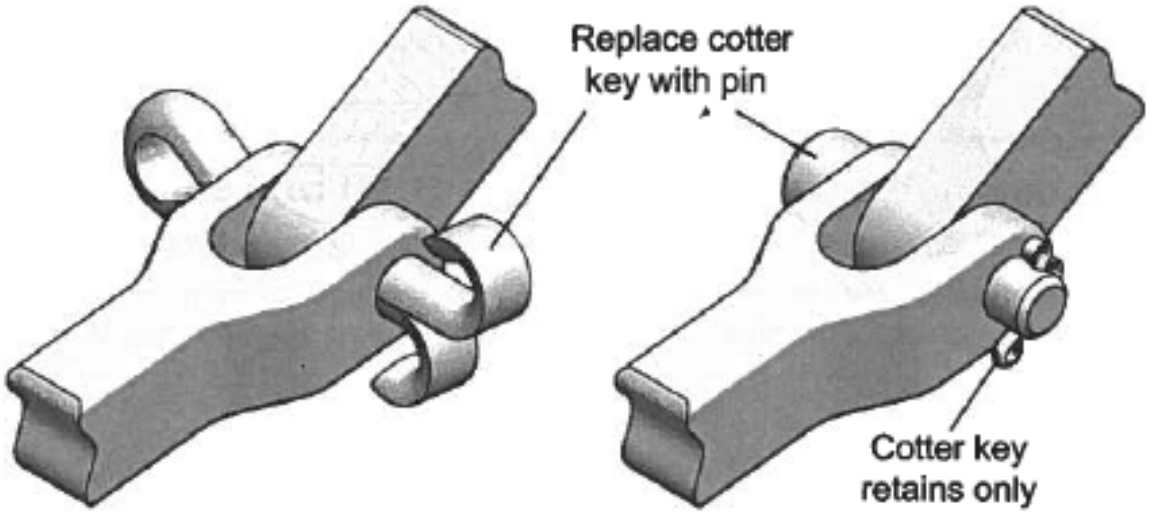

Figure 20-1 A simple example of mechanical amplification.

Practical advice

Include lead-ins in assembled designs

The tapered end provides three functions:

- Starting, or spearing the parts together
- Aligning to the desired final position
- Directing the applied force

Practical advice

Design assemblies to be:

- Self-locating
- Self-fixturing
- Self-securing
- Self-aligning
- Self-adjusting
- Self-assembling

Self locating & self-fixturing

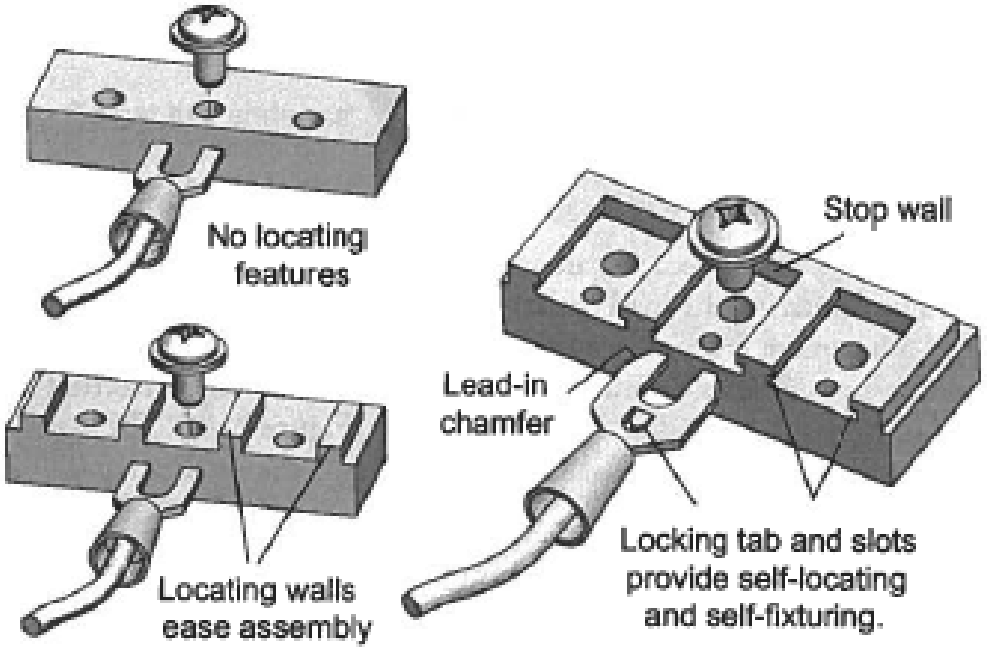

Figure 22-1 Self-locating and self-fixturing examples of a spade terminal.

Self-aligning

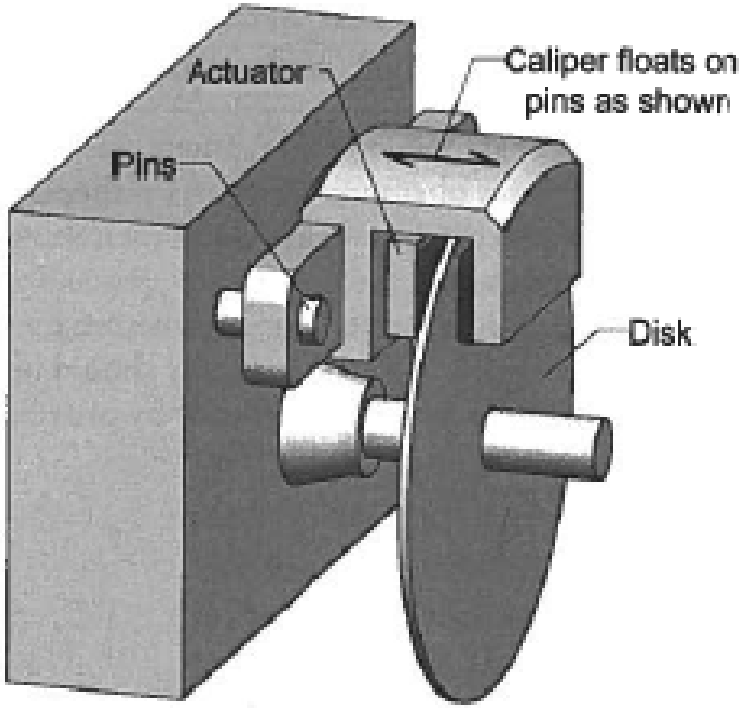

Figure 22-2 Self-aligning caliper of disk brake assembly.

Self adjusting

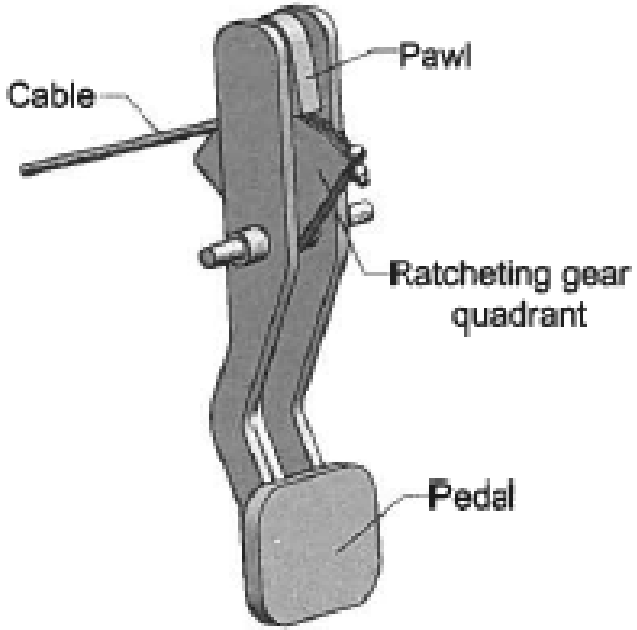

Figure 22-3 Self-adjusting clutch cable assembly.

Use self assembling symmetry

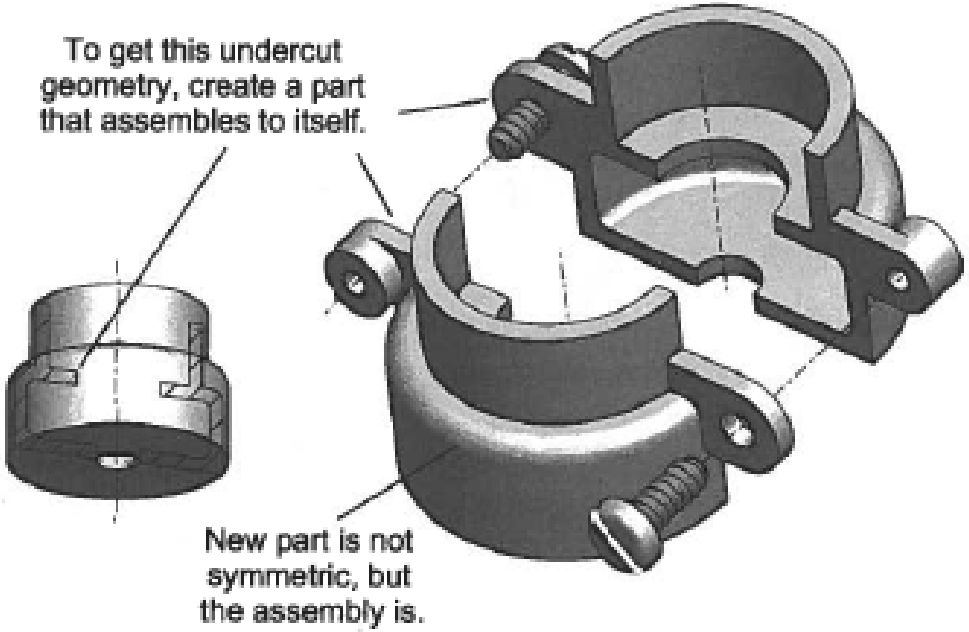

Figure 23-1 A cylindrical assembly with an undercut. Self-assembling symmetry allows the parts to be identical.

Identical halves

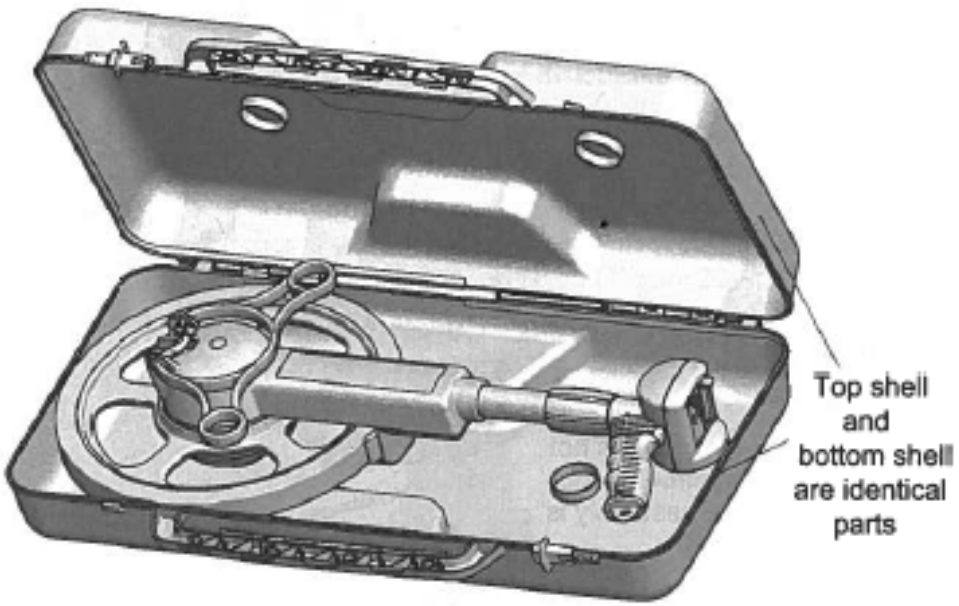

Figure 23-2 Identical large housing halves. Identical halves can reduce tooling costs and simplify assembly. (Used with permission of Meter-Man, Inc.)

Feature detail

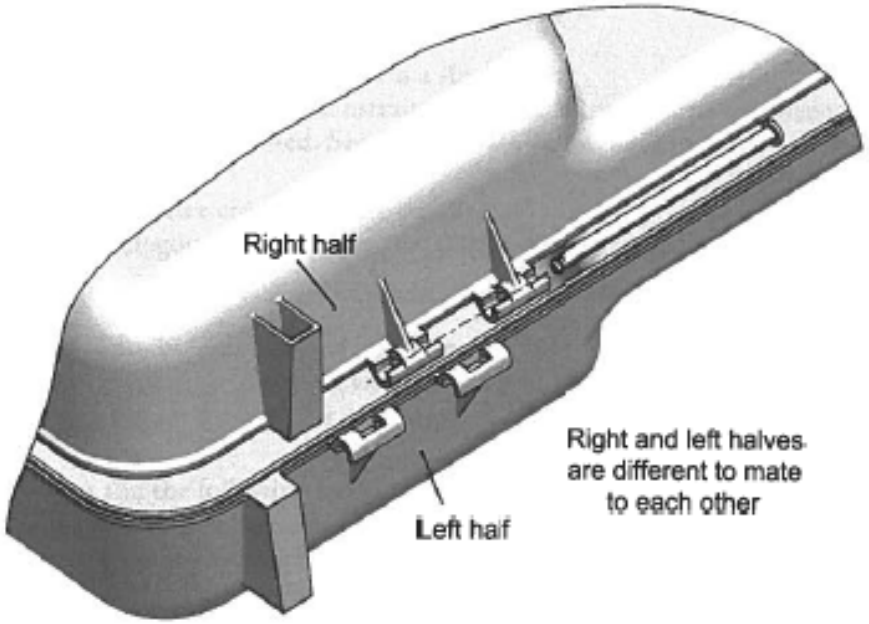

Figure 23-3 Feature detail of self-assembling symmetry. (Used with permission of Meter-Man, Inc.)

Practical advice

References

1. J.G. Skakoon, The Elements of Mechanical Design, ASME Press, New York, 2008.